8200IS Series

Intrinsically Safe Indicator

Technical Manual

MAN289 – Rev 7 (2.3)

Doran Scales, Inc.

www.doranscales.com

Table of Contents

Introduction

Thank you for purchasing a Doran Scales Model 8200IS Intrinsically Safe indicator. The Model 8200IS indicator for Hazardous Locations is designed to provide consistent reliability in the most demanding environments.

This manual describes the installation, operation and functionality of the 8200IS Intrinsically Safe Indicator. Please be sure to read the entire manual and control drawings to ensure that you obtain all the benefits that the 8200IS series can provide. If any questions arise, please feel free to contact the Doran Scales Technical Support Department at tech@doranscales.com.

Doran Scales, Inc.
883 Enterprise Ct.
St. Charles, IL 60174

UL LISTED

E485121

Specifications

UL Certificate Number	20190304-E485121
Enclosure	304 Stainless Steel
Product Dimensions	10” W x 6.75” H x 3.5” D
Environmental Protection	IP6X
Temperature Range	14 F to 104F (-10 C to +40 C) 8CHG only: 14 F to 86 F (-10 C to +30 C)
Altitude	Up to 2000 meters
Resolution Range	200d to 100,000d
Humidity	Maximum relative humidity 95%, non-condensing
Analog Signal Sensitivity	0.16 μV/e minimum, 0.5 μV/e typical
System Linearity	0.01% full scale
Analog Signal Range	-0.5mV/V to 5 mV/V with 4 and 6 wire input
Excitation Voltage	5 VDC
Number of Load Cells	Up to (4) 350 Ohm, 4 or 6 wire
Load Cell Entity Parameters	Load cells must be certified for appropriate hazardous area and entity parameters. See note one on control drawing 900243 Uo 7.14 V, Io 0.7076 A, Po 0.895 W, Co 10.8 uF, Lo 71 uH
Scale Inputs	One
Calibration Range	Calibrate between 2% and 100% of capacity
Power Input	100 VAC 50/60Hz
Battery Option	Rechargeable Sealed Lead Acid Battery Charging time 36 for 8 hours of continuous use, 1000 recharge cycles
Display	1" high, 6 digit backlit LCD
Displayed Units	lb, kg, oz, g, lb:oz
Capacity Range	1 to 999,000 lb
Communication	Two Fiber Optic Ports standard
Communication Options	Safe Area Fiber Optic to RS-232 Output Converter (Part#: 8FB)
Remote Inputs	Two programmable remote switch inputs

Scale Operation

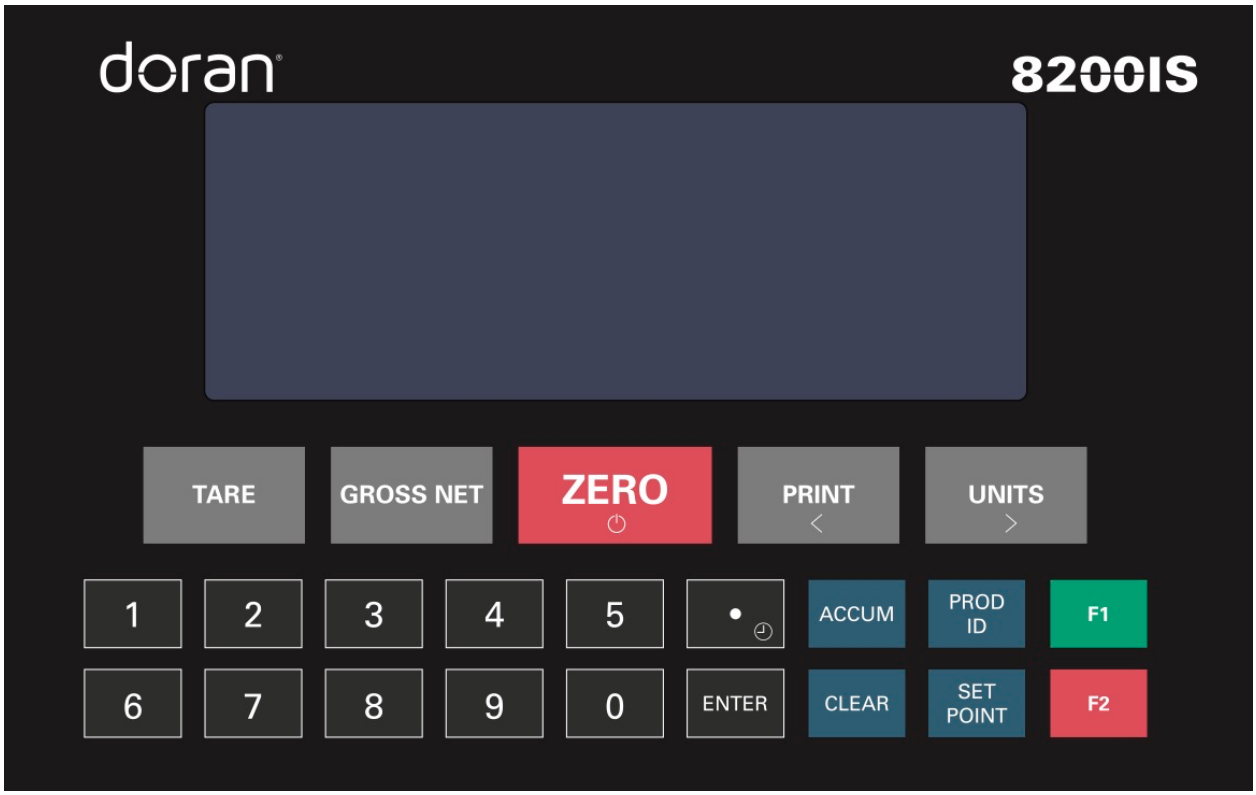

Fig. 1: Model 8200IS Front Panel Layout

Scale Annunciators

	Unit of measure lb, oz, kg, or g. The units annunciator to the right of the display will indicate the current unit of measure.
NET	Net weighing mode is indicated by the NET annunciator. The annunciator will illuminate when a net weight is displayed. When not illuminated, a gross weight is displayed.
►0◄	Center of zero. The annunciator will illuminate while the scale is displaying a zero weight.
MOTION	Motion indicator. This symbol represents motion or instability of the weight. The annunciator will illuminate when motion is sensed on the platform. Changes in weight, vibration or air currents can cause the scale to go into motion.
▭	Battery annunciator. Indicates that the battery is near low battery status that automatically turns off the indicator. Recharge the battery or replace with a charged battery.

1 to 8 setpoint output status indicators. Below the weight display are annunciators that are illuminated when an output is active in weighing mode or the current setpoint or preact is being edited.

Powering On and Off

Connect the indicator to a compatible AC or Battery power source.

To turn the indicator on, press ZERO.

To turn the indicator off, press and hold ZERO until OFF is displayed.

Basic Weighing Operation

1) Remove all items from the scale platform
2) Press the ZERO button to zero the scale
3) The weight display now reads zero
4) Place an item on the scale platform and wait for the motion annunciator to turn off, indicating an accurate, stable weight

ZERO

ZERO is used to zero the scale. To zero the scale, press the ZERO button. The scale will not zero if the scale is in motion. The zero function will operate over the entire capacity of the scale.

If the scale is displaying a net weight, pressing ZERO will return the scale to gross mode and display a zero weight. The stored tare will remain in memory.

The scale is equipped with a Zero on Demand parameter which zeros the scale upon the next stable reading after ZERO is pressed.

TARE

Place the item you wish to tare on the scale platform and press TARE. The scale will display a net weight and the NET annunciator will illuminate.

Tare weights will remain in memory even if the indicator is turned off.

Keyboard TARE entry

Enter a weight and press TARE to save or press CLEAR to cancel tare entry. The scale will display a net weight and the NET annunciator will illuminate.

Digital Tare Entry

Enter a weight and press TARE to save or press CLEAR to cancel tare entry. The scale will display a net weight and the NET annunciator will illuminate.

When utilizing the Product ID memory, a Tare weight is stored with the associated Product ID number if desired.

Display TARE value

To display the current tare value, press and hold TARE for three seconds. The display will briefly read TARE then flash the tare weight in the currently selected units. To exit press CLEAR.

Clear TARE value

Enter 0 and press TARE. This will remove the tare weight from memory. The display will read CLRTAR to confirm the tare value has been cleared.

GROSS NET

Press the GROSS NET button to switch between the gross and net weighing mode. Switching to the net mode is possible only when a tare is entered. Net mode is indicated when the NET annunciator is illuminated.

UNITS

UNITS selects the unit of measure. Press UNITS to change the current unit. The units annunciator to the right of the display will indicate the current unit or measure: lb, oz, kg, or g. Lb:oz is disabled by default. Each unit can be enabled or disabled in the scale parameter setup.

PRINT

PRINT transmits data to a printer or other external devices. When the data is transmitted, the leftmost display digit will momentarily display an "r" to confirm data transmission.

There are many parameters that customize the control of manual and automatic transmission of data. Data can be transmitted via standard fiber optics to Doran's safe area fiber optic converter. Contact Doran Tech Support at tech@doranscales.com for support.

Password Protected Setpoint, Preact, Tare and Check Limit Values

All values can be reviewed, but cannot be changed unless the password is deactivated. If the password protection is activated, the display will display PASS when the SETPOINT, TARE, UNDER or OVER values are changed. Enter the password and press ENTER, the display shows PASS then OFF. Press SETPOINT to change or review weight values or press and hold SETPOINT to edit or review preacts.

After entering the new setpoint or preact values, press and hold the ENTER button for 2 seconds to activate the password protection.

NOTE: If a password number has been activated in parameter 2.10 PASS, the password protection will be activated upon power up.

Setpoint and Output Operation for Standard Configuration

The 8200IS is equipped with eight outputs and eight setpoints. The output must be assigned by the Output Configuration (9.7 OUT) parameter to any of the eight setpoints, remote input, batch program control and threshold weight to activate. A setpoint is a target weight that triggers an output. The method of triggering the assigned output is controlled by the configuration of the Setpoint Operation (9.4 S.O.) parameter. No outputs are available on board due to intrinsic safety requirements. All output status will be communicated via fiber optic to a safe area communications box such as Doran's optional 8FB fiber optic to RS232 converter.

Enter SETPOINT Target Weight

Press SETPOINT. The last viewed or edited setpoint will be displayed. Press UNITS or PRINT to scroll through the eight available setpoints. The annunciators below the main display indicate the current setpoint.

Enter the setpoint weight using the numeric keypad. Press SETPOINT to accept the change and return to the weigh mode or press UNITS or PRINT to save and edit other setpoints. Press SETPOINT to exit this mode.

The display will read ABORT to indicate no changes were made to the setpoint values or the display will read SAVED to indicate the setpoint value is saved.

Display SETPOINT Target Weight

Press SETPOINT. The last viewed or edited setpoint will be displayed. Press UNITS or PRINT to scroll through the eight available setpoints. The annunciators below the main display indicate the current setpoint. Press SETPOINT to exit this mode.

Setpoint Learning Preacts

A preact works with setpoints to allow the user to enter setpoint target weights that are the final desired weight. The preact automatically adjusts the setpoint target weight required for material in transit variations or line pressure changes. The output assigned to the setpoint will then transition before the setpoint target weight is achieved.

Note: Preacts are always adjusting the weight through the learning process. If the process has not changed, it should not be necessary to change this value. If the process is not reliably in control, change Preact Adjustment % Configuration (9.6 PRE) parameter to dial in the learning process. Use the password protection feature if adjustment of the preact could cause a safety issue.

Output Transition = Setpoint target weight – preact weight

The preact value changes based upon the final weight using the following formula:

Preact = previous preact + Adjustment % x (final stable weight – setpoint target weight)

The Preact Adjustment % Configuration (9.6 PRE) parameter affects how the learning preact will react to changes. The default value is 50% when the learning preact is turned on. The final stable weight sample will be collected within 3.5 seconds of the output transition. If no stable weight can be achieved in this time, the preact will not be

adjusted for that measurement. The overall change will be limited to a maximum of 63% of the setpoint value, regardless of the adjustment percentage.

For Example:
20 pounds of a material is desired and material in transit is observed and estimated at 0.5 lb.
Setpoint 1 is set to 20 lb
Preact 1 is set to 0.5 lb
Adjustment % is left at the default of 50%

After running the process, the final weight is observed to be 20.3 lb

Preact = 0.5 lb + 0.5 x (20.3 – 20)
Preact = 0.65 lb

Enter Setpoint Preact Weight

Press SETPOINT. The last viewed or edited setpoint will be displayed. Press ZERO to display the preact weight. Press UNITS or PRINT to scroll through the eight available preacts. The annunciators below the main display indicate the current setpoint. Input the desired preact weight, then press ENTER. Press SETPOINT to exit this mode.

Display Setpoint Preact Weight

Press SETPOINT. The last viewed or edited setpoint will be displayed. Press ZERO to display the preact weight. Press UNITS or PRINT to scroll through the eight available preacts. The annunciators below the main display indicate the current setpoint. Press SETPOINT to exit this mode.

Tank Level Maintenance Mode Standard Configuration

The FIL Setpoint Operation (9.4 S.O.) maintains a level in a tank between two setpoint target weights. This allows the tank to be drained to a desired amount before being refilled to a maximum target weight. Setpoint 1 will be the low level of the tank, and setpoint 2 will be the high level. When the tank is drained to setpoint 1, the output turns ON and the tank will begin filling. When the tank fills up to setpoint 2, the output turns OFF and until the tank is once again drained to setpoint 1. The output has been represented graphically below. No outputs are available on board due to intrinsic safety requirements. All output status will be communicated via fiber optic to a safe area communications box such as Doran's optional 8FB fiber optic to RS232 converter.

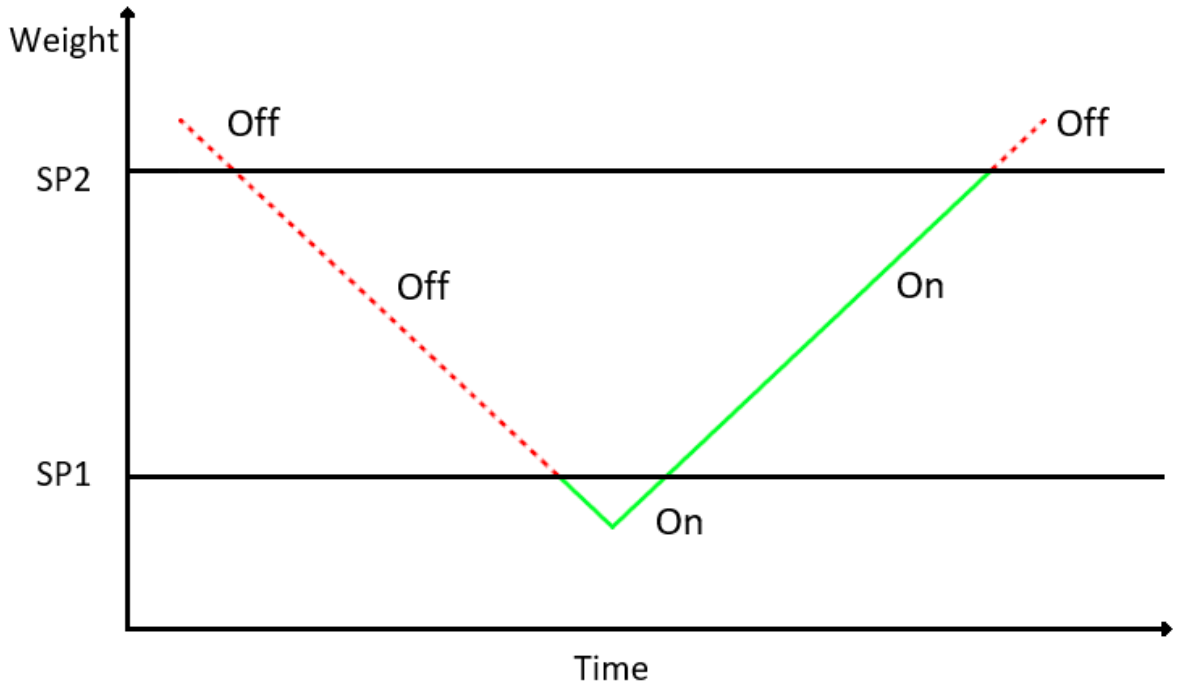

To configure this operation:

1. Setpoint 1 must be configured to oFF in the Setpoint Operation (9.4 S.O.) parameter.
2. Setpoint 2 must be configured to FIL in the Setpoint Operation (9.4 S.O.) parameter.
3. Assign setpoint 2 to an output in Output Operation (9.7 OUT) parameter.
4. Enter setpoint 1 as the lowest weight desired, as described in the setpoint section of the manual.
5. Enter setpoint 2 as the highest weight desired, as described in the setpoint section of the manual.
6. Ensure Setpoint Weight Operation (9.5 SW) is configured to DSP for displayed weight.

Note: While FIL is set to setpoint 2, the ZERO button is disabled

Product ID Standard Configuration

800 product IDs are available. Deploying a large library of IDs with multiple scales can be easy to manage with Doran's data management programs.

Product IDs save information that includes:

- Setpoint values
- Preact values
- Unit of measure
- Accumulator and counter values
- Tare
- Two 40 alphanumeric character fields
- Motion Aperture (1.6 M.A.)
- Threshold (2.5 THS)
- Setpoint operation (9.4 S.O.)
- Output configuration (9.7 OUT)

Recall PRODUCT ID from Memory

When powered on, no product ID will be loaded. This is indicated when pressing PROD ID and the display reads OFF. Once a product ID is loaded, the unit of measure is locked in the unit of the product ID.

To select a stored product, press PROD ID, enter the ID number and press ENTER. The display will read SAVED to indicate the fields associated with that Product ID number are active. After selecting a product, the scale will measure and display in the units saved for that product. The UNITS button will then be disabled. Selecting product 'OFF' will re-enable the UNITS button.

Another method to select a product is to press PROD ID, then use the UNITS or PRINT buttons to scroll through the available products. Press ENTER to select the displayed product. The display will read SAVED to indicate the fields associated with that Product ID number are active.

Display Current PRODUCT ID

Press PROD ID, the display will show ID followed by the currently active product.

Create New PRODUCT ID

Select the desired unit that will be used to checkweigh the new product. Enter a product ID up to 6 digits not currently in memory and press PROD ID. The display will momentarily show NEW then ID. Then return to weighing mode. All fields associated with the new Product ID number will be blank.

To enter and save values for all fields associated with the current Product ID, enter values for each field. When changing products, the display will read SAVED to indicate that all fields associated with the new Product ID number are saved and will be recalled when that product is used again.

Delete PRODUCT ID from Memory

Enter the product ID to be deleted and press PROD ID. The display will show PRD ID, followed by the Product ID number. Press and hold the CLEAR button for more than 2 seconds. The display will show CLR ID and then DONE. All fields associated with that Product ID number will be cleared. The previously used Product ID number will become active.

Product Fields Standard Operation

The indicator memory has eight 40-character alphanumeric fields that can be entered and transmitted as desired using custom data strings. In addition, there is a ninth product for serialization which increments from the five digit number entered. This is useful for custom data labels and data collection.

Display Product Fields

To access Product Fields, press and hold PROD ID on the front panel for 3 seconds. The display will show “PF 1” for a second, then display the first 6 characters of the product field if they are numeric. The eight fields can be cycled through by pressing ENTER. Press PROD ID to exit from the Product Field mode.

Product Field Entry

To access Product Fields, press and hold PROD ID on the front panel. After 3 seconds, the scale display will change from the current platform weight to show which Product Field is ready for entry. For the first field, the display will show “PF 1” for a second, then display the current entry of this field.

Product Fields can be entered by external communications, or by the keypad on the front panel. A keypad entry followed by pressing ENTER, will store the entered value as that Product Field. Once entered, the scale will then display the next Product Field, in this case “PF 2”. The scale will cycle through the 9 Product Fields unless the user presses PROD ID again, which will exit from the Product Field mode.

Accumulator and Counter Standard Operation

Accumulator and Counter Operation

When a manual or automatic print function is executed, the accumulator has the currently displayed weight added to its current value and the counter is incremented.

To accumulate automatically, select an auto print function in the parameter setup menu.

To accumulate manually, allow the scale to become stable and press PRINT.

The maximum value that can be shown for the accumulator and counter is 999,999. When the maximum value is reached, the accumulator and counter will rollover to a zero value. This feature can only be used in a non Legal For Trade application.

If using Product ID functions, the Accumulator and Counter values are stored with the associated product.

Display Accumulator and Counter Values

Press the ACCUM button to enter the accumulator and counter recall mode. The display will show ACCUM followed by the accumulated weight in the units currently selected in the weigh mode. Then COUNTR will be displayed followed by the counter value.

Press ACCUM to exit the accumulator and counter recall mode without changing their values.

Clear Accumulator and Counter

Press the ACCUM button to enter the accumulator and counter recall mode. The display will show ACCUM followed by the accumulated weight in the units currently selected in the weigh mode. Then COUNTR will be displayed followed by the counter value.

Press CLEAR to clear the accumulator and counter values. The display will show CLR AC and exit from the recall mode.

Changing the current display units will clear both the accumulator and counter values.

Accumulator and Counter Data String Output to Printer or Data Collection

Press ACCUM to enter the accumulator recall mode. Press PRINT to transmit the LB4 custom data string that contains the accumulator and counter values by default. Both the accumulator and counter values are cleared after transmission.

Checkweighing Operation

The indicator can be converted from the standard configuration into checkweighing operation. Checkweighing removes the functionality of setpoints and outputs, and activates checkweighing. Some sections will be repeated to reflect the full functionality of the checkweighing operation.

Three Band Checkweighing

Three band checkweighing classifies weighments into over, accept and under. The default configuration is three band checkweighing.

Three Band Checkweighing (9.1 C.O. set to operation starting with 3)

1. Remove all items from the scale platform
2. Press ZERO and the display will read zero weight
3. Place an item on the scale platform and wait for the scale to stabilize
4. Accept, Over or Under annunciators indicate checkweigh status

Enter and Display of Checkweigh Limits (9.2 C.E. default value SCR)

1. Press F1 (OVER) or F2 (UNDER)
2. The display will briefly read OVER or UNDER followed by the current limit
3. Enter limit value using the keypad and decimal point
4. Press ENTER to save the value or press CLEAR to exit without saving
5. SAVED is displayed if saved or ABORT is shown if aborted

Weight Reference and Digital Entry of Checkweigh Limits (9.2 C.E. set to SCS)

1. Press ZERO
2. Place a target item on the scale
3. Press F1 (OVER) or F2 (UNDER)
4. The display will briefly read OVER or UNDER followed by the weight on the platform
5. Press either F1 (OVER) to increase the weight value or press F2 (UNDER) to decrease the weight value. Pressing and holding will accelerate the weight scroll.
6. Press ZERO to save the value or press PRINT to exit without saving
7. SAVED is displayed if saved or ABORT is shown if aborted

Weight Reference Entry of Checkweigh Limits (9.2 C.E. set to Pb)

1. Press ZERO
2. Place a weight equal to the desired F1 (OVER) or F2 (UNDER) limit on the platform
3. Press F1 (OVER) or F2 (UNDER)
4. OVER or UNDER is displayed and then SAVED to indicate the new Over limit was saved.

Five Band Checkweighing

Five band checkweighing classifies weighments into high, over, accept, under and low.

Five Band Checkweighing (9.1 C.O. set to operation starting with 5)

1. Press ZERO
2. Place an item on the scale
3. Checkweigh status is indicated as follows
    a. Flashing OVER = HIGH
    b. Solid OVER = OVER
    c. Solid ACCEPT = ACCEPT
    d. Solid UNDER = UNDER
    e. Flashing UNDER = LOW

Enter and Display of High and Low Limits (9.2 C.E. default value SCR)

1. Press and hold the F1 (OVER) or F2 (UNDER) until the display reads HIGH or LOW respectively
2. The current weight value of the saved limit is displayed and checkweigh status annunciators will flash
3. Enter limit value using the keypad and decimal point
4. Press ENTER to save the value or press CLEAR to exit without saving
5. SAVED is displayed if saved or ABORT is shown if aborted

Weight Reference and Digital Entry of High and Low Limits (9.2 C.E. set to SCS)

1. Press ZERO
2. Place an item of the desired weight on the scale platform
3. Press and hold the F1 (OVER) or F2 (UNDER) until the display reads HIGH or LOW respectively
4. The current weight value of the saved limit is displayed and checkweigh status annunciators will flash
5. Press either F1 (OVER) to increase the weight value or press F2 (UNDER) to decrease the weight value. Pressing and holding will accelerate the weight scroll.
6. Press ZERO to save the value or press PRINT to exit without saving
7. SAVED is displayed if saved or ABORT is shown if aborted

Weight Reference Entry of High and Low Limits (9.2 C.E. set to PD)

1. Press ZERO
2. Place an item of the desired weight on the scale platform
3. Press and hold the F1 (OVER) or F2 (UNDER) until the display reads HIGH or LOW respectively
4. The display will briefly read OVER or UNDER followed by the weight on the platform and checkweigh status annunciators will flash
5. Press either F1 (OVER) to increase the weight value or press F2 (UNDER) to decrease the weight value. Pressing and holding will accelerate the weight scroll.
6. Press ZERO to save the value or press PRINT to exit without saving
7. SAVED is displayed if saved or ABORT is shown if aborted

Zero Band Checkweighing

Basic checkweighing - simply set the desired weight on the platform, press zero and checkweigh based upon the standard tolerances in the O.U. parameter (9.3 O.U.).

Zero Band Checkweighing (9.1 C.O. set to operation starting with 0)

1. Remove all items from the scale platform
2. Place the target weight on the scale platform
3. Press ZERO and the display will read zero weight
4. Remove the target weight
5. Place an item on the scale platform and wait for the scale to stabilize
6. A zero weight will indicate the item is exactly the target weight. Any weight above or below zero indicates the amount of weight away from the target weight.
7. Accept, Over or Under will be displayed based upon the tolerance set in 9.3 O.U.

Product ID Checkweigh Operation

800 product IDs are available. Deploying a large library of IDs with multiple scales can be easy to manage with Doran's QC Weigh and CheckWay data management programs.

Product IDs save information that includes:

- Checkweigh limits
- Unit of measure
- Accumulator and counter values
- Tare
- Two 40 alphanumeric character fields
- Number of samples and alarm timer for QC Weigh
- Motion Aperture (1.6 M.A.)
- Threshold (2.5 THS)
- Checkweigh operation (9.1 C.O.)
- Checkweigh limit entry (9.2 C.E.)
- Output configuration (9.7 OUT)

Recall PRODUCT ID from Memory

When powered on, no product ID will be loaded. This is indicated when pressing PROD ID and the display reads OFF. Once a product ID is loaded, the unit of measure is locked in the unit of the product ID.

To select a stored product, press PROD ID, enter the ID number and press ENTER. The display will read SAVED to indicate the fields associated with that Product ID number are active. After selecting a product, the scale will measure and display in the units saved for that product. The UNITS button will then be disabled. Selecting product 'OFF' will re-enable the UNITS button.

Another method to select a product is to press PROD ID, then use the UNITS or PRINT buttons to scroll through the available products. Press ENTER to select the displayed product. The display will read SAVED to indicate the fields associated with that Product ID number are active.

Display Current PRODUCT ID

Press PROD ID, the display will show PRD ID followed by the currently active product. Press ENTER to leave this mode.

Create New PRODUCT ID

Select the desired unit that will be used to checkweigh the new product. Enter a product ID up to 6 digits not currently in memory and press PROD ID. The display will momentarily show NEW. Then return to weighing mode. All fields associated with the new Product ID number will be blank.

To enter and save values for all fields associated with the current Product ID, enter values for each field. When changing products, the display will read SAVED to indicate the all fields associated with the new Product ID number are saved and will be recalled when that product is used again.

Delete PRODUCT ID from Memory

Enter the product ID to be deleted and press PROD ID. The display will show PRD ID, followed by the product ID number. Press and hold the CLEAR button for more than 2 seconds. The display will show CLR ID. The product ID will be set to off until another product ID is selected.

User ID Checkweigh Operation

User logins can be entered prior to weighing when using Product IDs while the 8200IS is set to QC Weigh mode. This locks scale weighments behind a login and records the User ID of samples in ionSuite.

User ID login

With the display showing LOGIN, enter in through the keypad up to 20 digits for a user ID number. The User ID entered is compared with a list of up to 200 User IDs stored in the scale's memory. If a User ID entered does not match any of the stored IDs, the display will show ERROR NO USER message.

User ID Logout

Press and hold the CLEAR button for more than 2 seconds. The display will show CLRUSER. Display will show LOGIN to indicate scale is disabled and requires a user id to login.

Product Fields Checkweigh Operation

The 8200IS has eight 40-character alphanumeric fields that can be entered and transmitted as desired using custom data strings. In addition, there is a ninth product field for serialization which increments from the five-digit number entered every time a print occurs. This is useful for custom data labels and data collection.

Display Product Fields

To access Product Fields, press and hold PROD ID on the front panel for 3 seconds. The display will show PF 1 for a second, then display the first 6 characters of the product field if they are numeric. The nine fields can be cycled through by pressing ENTER. Press PROD ID to exit from the Product Field mode.

Product Field Entry

To access Product Fields, press and hold PROD ID on the front panel for 3 seconds. The scale display will change from the current platform weight to show which Product Field is ready for entry. For the first field, the display will show PF 1 for a second, then display the current entry of this field.

A keypad entry followed by pressing ENTER, will store the entered value as that Product Field. Once entered, the scale will then display the next Product Field, in this case PF 2. The scale will cycle through the 9 Product Fields unless the user presses PROD ID again, which will exit from the Product Field mode.

QC Weigh Operation

The 8200IS is capable of automatic checkweigh operation. Through use of our external data management program, ionSuite, users can: input custom products, input unique users, and run reports on the data collected. See the Product ID and User ID sections of this manual for more information of what can be input. QC Weigh requires either Ethernet or WiFi after the safe area RS-232 converter.

QC Weigh Mode

When adding the scale to ionSuite, it tests the connection to the scale and changes the operation to QC Weigh Mode.

If needed, the configuration can be changed manually as well. To do so, enter the scale's Calibration and Parameter Setup Mode, then change parameter 1.12, Operating Mode, to 0.CU, or QC Weigh. This process is detailed in the Scale Parameter Setup section.

Entering a User ID

When in QC Weigh mode, the scale will display LOGIN. Users can be added by selecting any scale on the QC Weigh network, selecting the Scale Login Tab and adding users. Once created, the users must be saved to all scales.

After putting the scale into QC Weigh Mode, the scale will read LOGIN. The scaler can manually input using the keypad, then press ENTER to advance to the next screen.

Entering a Product ID

Ensure that Product IDs are stored on the indicator before attempting to enter a Product ID. This process is done in ionSuite. Product IDs can be up to 20 alphanumeric characters in length. The last 6 characters are displayed on the LED screen.

After a User ID has been entered, a new screen will appear showing the stored Product IDs. The scaler can user one of two methods to input their Product ID:

The Product ID can be manually selected. Use the UNITS and PRINT buttons on the scale to scroll forward or backwards respectively. Once highlighting the desired Product ID, press ENTER to advance to the next screen.

A numeric Product ID can be entered via the keypad and press ENTER

Selecting OFF then ENTER will exit Product ID and return to LOGIN

Checkweigh Operation

Once a valid User ID and Product ID is enabled, the checkweigh process will begin. Operation goes as follows:

Alarm Timer:
When checkweighing begins, a timer defined in the Product ID will begin to count down. If this counter reaches 0, LATE will appear. Any samples taken after late is displayed will be counted as late in ionSuite reports.

Sample Number:
Whenever a sample is weighed, a "c" will appear for 3 seconds, indicating that a stable reading was saved for that sample. When the stable weight is achieved, the weight is locked and immediately transmitted to ionSuite. Once the sample is removed, the next sample number will flash on the scale. Once all samples are completed on a product, DONE will appear on the scale, and will begin the alarm countdown sequence.

Exiting:
During either the process of entering a product or checkweighing, press and hold CLEAR to return to the LOGIN screen.

ionSuite Syncing of Product IDs and User IDs

To sync User IDs and Product IDs to the scale, the scale must be in login mode. Only sync to the scale when the scale displays LOGIN.

Data Output

When scale's Operating Mode is set to QC Weigh, all enabled Data Outputs are set to AP2. These must stay set to AP2 for QC Weigh to function properly. More information on AP2 in Data Outputs section.

Accumulator and Counter Checkweigh Operation

Accumulator and Counter Operation

When a manual or automatic print function is executed, the accumulator has the currently displayed weight added to its current value and the counter is incremented.

To accumulate automatically, select an auto print function in the parameter setup menu.

To accumulate manually, allow the scale to become stable and press PRINT.

The maximum value that can be shown for the accumulator and counter is 999,999. When the maximum value is reached, the accumulator and counter will rollover to a zero value. This feature can only be used in a non Legal For Trade application.

If using Product ID functions, the Accumulator and Counter values are stored with the associated product.

Display Accumulator and Counter Values

Press the ACCUM button to enter the accumulator and counter recall mode. The display will show ACCUM followed by the accumulated weight in the units currently selected in the weigh mode. Then COUNTR will be displayed followed by the counter value.

Press ACCUM to exit the accumulator and counter recall mode without changing their values.

Clear Accumulator and Counter

Press the ACCUM button to enter the accumulator and counter recall mode. The display will show ACCUM followed by the accumulated weight in the units currently selected in the weigh mode. Then COUNTR will be displayed followed by the counter value.

Press CLEAR to clear the accumulator and counter values. The display will show CLR AC and exit from the recall mode.

Changing the current display units will clear both the accumulator and counter values.

Accumulator and Counter Data String Output to Printer or Data Collection

Press ACCUM to enter the accumulator recall mode. Press PRINT to transmit the LB4 custom data string that contains the accumulator and counter values by default. Both the accumulator and counter values are cleared after transmission.

Calibration Guide

Entering Calibration and Parameter Setup Mode

Front Panel Access

1. Press and hold ZERO and UNITS simultaneously until the audit counters are displayed.
2. ENT CD is displayed
3. Press ZERO 5 times, so that 5 is displayed,
4. Press UNITS

Internal Calibration Button

The calibration push button is located near the center of the board and labeled CAL. Press this button to enter calibration and setup.

Exit Calibration and Parameter Setup Mode

Front Panel Access

1. Press UNITS until the display reads 99 DON
2. Press the ZERO button
3. The display reads DONE N
4. Press the ZERO button
5. The display reads DONE Y
6. Press UNITS to return to the run mode
7. Display reads SAVED to confirm changes are saved to memory

Internal Calibration Button

The calibration push button is located near the center of the board and labeled CAL. Press this button to exit calibration and save settings.

Set Scale Capacity

Recalibration is required after changing the capacity.

1. Press UNITS until 1 CAL is displayed
2. Press ZERO
3. The display will alternate between CAP AJ and the currently selected capacity
4. Press ZERO to change the capacity
5. The units annunciator will flash indicating the unit of measure for the capacity. Press ZERO to change the unit of measure if required.
6. Use keypad to input capacity value, then ENTER to submit.
7. Once the capacity has been set, the display will return to alternately displaying CAP AJ and the new capacity value

Set Scale Count By

After the capacity has been entered, count by (resolution) will automatically be set for a legal for trade 5000 division level.

1. After setting scale capacity, press UNITS
2. The display will alternate between CNT BY and the current count by
3. Press ZERO to select the desired count by
4. If the capacity and resolution have been updated, continue to calibration

Two Point Calibration

An initial two point calibration is required in advance of a single point calibration.

1. Press UNITS until 1 CAL is displayed
2. Press ZERO
3. The display will alternate between CAP AJ and the currently selected capacity
4. Press UNITS until CAL 0 appears on the display
5. Remove all weight from the scale platform
6. Press ZERO and wait for the display to count down to 0
7. The display will alternate between CAL FS and the scale capacity
8. Place the calibration weight on the scale platform (2% of capacity to full capacity)
9. If calibrating with full scale capacity, press ZERO to begin calibration and move to step 11. If not calibrating at the scale capacity, continue to step 10
10. Use keypad to input desired calibration weight value, then ENTER
11. Press ZERO and the calibration process will begin and the display will count down to zero
12. The display will momentarily display DONE, followed by SAVED and return to the normal weighing mode
13. Verify scale calibration by adding and removing weight

Single Point Calibration – Zero Only

Two point calibration is required prior to single point calibration. Only the zero point will be updated with the previous span point remaining.

1. Press UNITS until 1 CAL is displayed
2. Press ZERO
3. Press UNITS until CAL 0 appears on the display
4. Remove all weight from the scale
5. Press ENTER until ONLY 0 appears on the display
6. Press ZERO and wait for the display to count down to 0
7. The display will momentarily display DONE, followed by SAVED and return to the normal weighing mode
8. Verify scale calibration by adding and removing weight

Single Point Calibration – Span Only

Two point calibration is required prior to single point calibration. Only the span point will be updated with the previous zero point remaining.

1. Press UNITS until 1 CAL is displayed
2. Press ZERO
3. Press UNITS until CAL 0 appears on the display
4. Remove all weight from the scale platform
5. Press ENTER until LAST 0 appears on the display
6. Press ZERO
7. The display will show the scale capacity
8. Place the calibration weight on the scale platform (2% of capacity to full capacity)
9. Use keypad to input desired calibration weight value, then ENTER
10. Press ZERO and the calibration process will begin and the display will count down to zero.
11. The display will momentarily display DONE, followed by SAVED and return to the normal weighing mode
12. Verify scale calibration by adding and removing weight

NOTE: Calibration at 2% of capacity has been provided as a convenience to customers with scales in inaccessible locations. Scales calibrated at 2% will not be as accurate at full capacity compared to scales calibrated at full capacity. It is the responsibility of the installer to ensure that scale accuracy is achieved after any calibration.

Calibration Error Codes

Code	Solution
SPAN E	The calibration span is out of range. Refer to the Scale Calibration Error Troubleshooting section.
ER MOT	The scale is sensing an unstable weight. Remove any vibration or air currents to continue calibration.

Scale Calibration Troubleshooting

The allowable load cell signal input range is 0.30 mV/V to 5.0 mV/V.

1. Calculate scale divisions by dividing the scale capacity by the count by. Example: For a 50 x 0.01 lb scale, divide 50 by 0.01 for a result of 5000d
2. Enter the calibration and parameter setup mode.
3. Press UNITS so that menu 2CnF9 is displayed.
4. Press ZERO to enter the configuration menu.
5. Press UNITS until the scale counts are displayed. This is the set of numbers after dEFt.
6. Remove all items from the platform and record the zero load scale counts reading.
7. Place full capacity on the platform and record the scale counts.
8. Verify that the counts are different for no load and full scale conditions. If the displayed counts do not change, check the load cell connections.
9. Subtract the zero load counts from the full load counts to calculate the span.
10. The span number, from step #7, must be higher than the scale divisions found in step #1.

If the span counts are too low or too high, check the load cell connections. If the connections are correct, replace the load cell.

If experiencing problems during calibration, contact Doran Scales technical support at tech@doranscales.com.

Scale Parameter Setup

Entering Calibration and Parameter Setup Mode

Front Panel Access

1. Press and hold ZERO and UNITS simultaneously until the audit counters are displayed.
2. ENT CD is displayed
3. Press ZERO 5 times, so that 5 is displayed,
4. Press UNITS

Note: Timeout can occur if not input in a timely manner. If so, repeat process.

Internal Calibration Button

The calibration push button is located near the center of the board and labeled CAL. Press this button to enter calibration and setup.

Exit Calibration and Parameter Setup Mode

Front Panel Access

1. Press UNITS until the display reads 99 DONE
2. Press the ZERO button
3. The display reads DONE N
4. Press the ZERO button
5. The display reads DONE Y
6. Press UNITS to return to the run mode
7. Display reads SAVED to confirm changes are saved to memory

Internal Calibration Button

The calibration push button is located near the center of the board and labeled CAL. Press this button to exit calibration and save settings.

Navigating Parameter Menu with Keypad

To navigate to a specific parameter, first enter calibration and parameter setup mode, as described above. Then, enter the parameter group number, a decimal point, and the element number, followed by the ENTER button. These values are located to the left of each parameter outlined later. For example, to navigate to raw counts, type 2.7 then ENTER.

Navigating Parameter Menu with ZERO, UNITS, and PRINT

Press UNITS and PRINT navigate to the desired top level parameter group. Enter the group by pressing ZERO. Once within a group, press UNITS to advance, PRINT to back up and ZERO to change the currently displayed parameter setting.

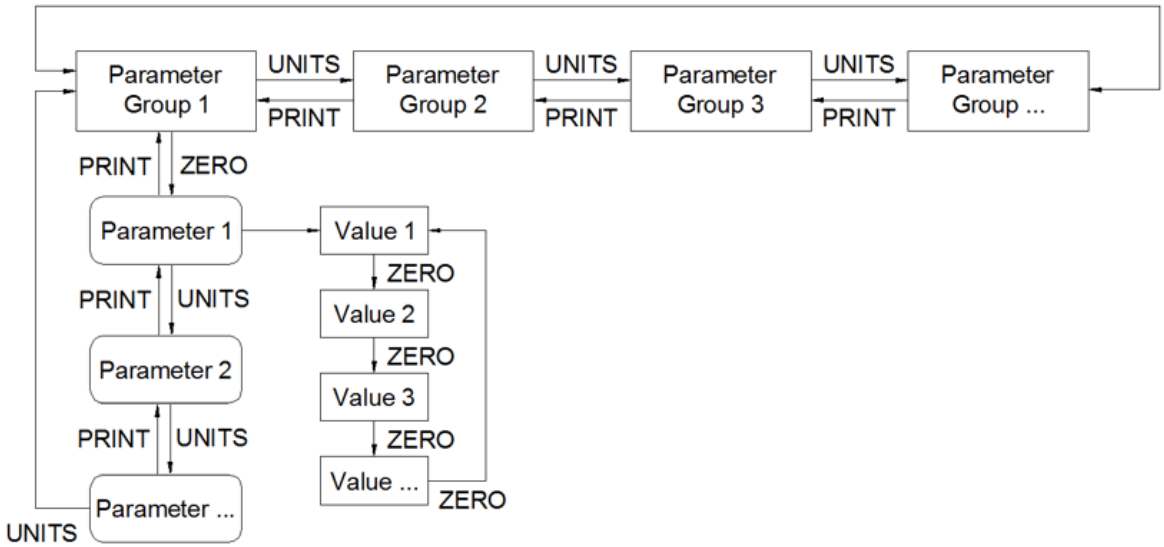

Parameter Groups

The scale parameters are divided up into parameter groups. Each group contains related parameters. Below is a brief list describing each parameter group.

1 CAL	Capacity and Calibration
2 CNFG	General Settings
3 FIB1	Fiber Optic Port #1
4 FIB2	Fiber Optic Port #2
9 OPER	Output Operation
99 DON	Exit

Legal for Trade Restrictions

When the Legal for Trade mode is enabled, it automatically disables some menus and parameter options. This is done to comply with NTEP and CWM requirements. The menus and parameter sections are shown on the following pages. Menus and parameters not available when in the Legal for Trade mode are marked by an asterisk.

Audit Counters

When entering calibration mode, the Parameter audit counter (P) and the Calibration audit counter (C) will momentarily be displayed. The Parameter audit counter increments when legal for trade values are changed. The Calibration audit counter increments when the scale is calibrated.

Software Part Number and Revision Level

During the front panel access procedure, the scale will display the software number and revision. The software number is SW 191 followed by the software revision level REV.

Please have the software number 191 and the revision level available when contacting our technical support department.

Capacity and Calibration - 1 CAL

1.1	CAP AJ	**Capacity Adjustment**
1 - 999000		1 lb / kg to 999,000 lb / kg Refer to calibration guide for more detail

1.2	CNT BY	**Count By Setup Menu** Also known as resolution or division
0.00002 5000		Selection limited by scale capacity Capacity/resolution (scale divisions) maximum value is 50,000d and minimum value is 200d

1.3	CAL 0	**Calibration Mode** Refer to Calibration Guide for calibration details
CAL 0		**Two Point Calibration (Zero then Span)** Press ZERO to perform two point calibration
ONLY 0		**New Zero Point Calibration Only** Press ENTER to select
LAST 0		**New Span Point Calibration Only** Press ENTER to select

1.4	AVG	**Display Filter Setting** Determines speed of digital filtering
1		Fastest display updates, most sensitive setting
2		**Default Setting**
4		
8		
16		
32		
64		Slowest display updates, least sensitive setting

1.5	AZT *	**Automatic Zero Tracking Range** Weight within the specified number of divisions are automatically zeroed
OFF		Zero tracking is off, no automatic zeroing
0.5		**Zero tracking to within 0.5 division**
1*		Zero tracking to within 1 division
3*		Zero tracking to within 3 divisions
5*		Zero tracking to within 5 divisions
10*		Zero tracking to within 10 divisions
20*		Zero tracking to within 20 divisions

1.6	M.A.*	**Motion aperture*** Determines the number of divisions that consecutive readings must change before the scale is considered to be in motion
0.5*		0.5 divisions
1		**1 division**
2*		2 divisions
3*		3 divisions
5*		5 divisions
10*		10 divisions

1.7	M.D.*	**Motion Delay*** Length of a motion indication display.
1 - 9		Length of a motion indication display, in 100ms intervals. Default is **3**. (Locked to 3 in Legal for Trade mode)

1.8	SUO*	**Start Up Zero** Controls the zero point when the scale is turned on
ON		**Zeros on the first stable reading on power up**
CLO		Loads the calibration zero point
PBO*		Loads the last pushbutton zero

1.9	TAR	**Tare Input**
PBN		**Tare Pushbutton as well as keypad entry**
PB		Tare Pushbutton only
N		Keypad only
OFF		No tare entry

*Parameters not available in Legal for Trade mode

1.10	ZOD	**Zero on Demand** Enables or disable zero latching
ON		If ZERO is pressed, it is saved until the scale becomes stable.
OFF		**If the scale is in motion, the zero request is discarded.**

1.11	POD	**Print on Demand** Enables or disables print latching
OFF		**If the scale is in motion, the print request is discarded.**
ON		If PRINT is pressed, the print request is saved until the scale becomes stable.
MT		Print when requested, whether the scale is in motion or not

1.12	OP	**Operating Mode**
STD		**Standard operation**
44		NTEP legal-for-trade. Restricts parameters to keep them within NTEP limits.
445		CWM legal-for-trade. Restricts parameters to keep them within CWM limits.
RI		Remote Indicator Mode – no buttons enabled
RIb		Remote Indicator Mode – buttons enabled
QCW*		QC Weigh Mode (Only available in checkweigh mode see 2.11)

1.14	DONE	**Exit Calibration and Setup**
Y		Saves and exits setup when PRINT or UNITS is pressed.
N		**Remain in setup**

General Settings - 2 CNFG

2.1	CSL	**Unit Enable and Disable** Determines which unit selections will be active	
NO		**Do not enter Convert selection menu**	
YES		Press ZERO then UNITS to enter menu below	
		LB	**pounds menu**
		ON	**lb is active**
		OFF	lb is non active
		KG	**kilograms menu**
		ON	**kg is active**
		OFF	kg is non active
		OZ	**ounces menu**
		ON	**oz is active**
		OFF	oz is non active
		GR	**grams menu**
		ON	**g is active**
		OFF	g is non active
		LO	lb:oz menu
		ON	lb:oz is active
		OFF	**lb:oz is non active**

NOTE: oz units are disabled for capacities greater than 60,000 lb
grams units are disabled for capacities greater than 2000 lb
lb:oz is only available for capacities between 10 and 1000 lb

2.2	UNITS	**Start Up Units Select Mode** Configures selection of startup units
		The unit annunciator, to the right of the display, indicates the active unit on power up. Press ZERO to change the selection.

2.3	P.B.	**Push Button Enable and Disable** Determines which buttons are active or inactive	
NO		**Do not enter push button selection menu**	
YES		Press ZERO then UNITS to enter menu below	
		PR	**PRINT button**
			ON **pb is active**
			OFF pb is non active
		UT	**UNITS button**
			ON **pb is active**
			OFF pb is non active
		ZR	**ZERO button**
			ON **pb is active**
			OFF pb is non active
		GN	**GROSS NET button**
			ON **pb is active**
			OFF pb is not active
		TR	**TARE button**
			ON **pb is active**
			OFF pb is not active
		R1	**Remote Switch Input 1**
			Pr PRINT
			UT UNITS
			Zr ZERO
			GN GROSS/NET
			Tr TARE
			AC ACCUMULATE
			OFF **No Function**
		R2	**Remote Switch Input 2**
			Pr PRINT
			UT UNITS
			Zr ZERO
			GN GROSS/NET
			Tr TARE
			AC ACCUMULATE
			OFF **No Function**
		AC	**ACCUM button**
			ON **pb is active**
			OFF pb is not active (disables accumulator function)
		ID	**PRODUCT ID button**
			ON **pb is active**
			OFF pb is non active
		SP	**SETPOINT button**
			ON **pb is active**
			OFF pb is non active

Continued	F1F2	**F1 and F2 buttons**	
		ON	**pb is active**
		OFF	pb is non active

Note: If a pushbutton is disabled, the function is still active, but not through the front panel

2.5	THS	**Threshold Level Entry** Represents a % of total capacity. This feature controls automatic printing features and setpoint state change.
0.001 - 9.9		Press 0 then ENTER for 0.001% Press 1 then ENTER for 0.01% Press 2 then ENTER for 0.1% Use keypad to enter value then ENTER for range of 0.3% to 9.9% Display cycles between % setting and threshold in calibration units. **Default setting is 1%**

2.6	DEFT	**Factory Default** See Default to Factory Settings section
N		**Do not default**
Y		Set parameters to default values

Note: Resetting parameters to factory default does not affect scale calibration

2.7	**Counts**	**Raw counts from the AD converter** Used for troubleshooting during calibration
xxxxxx		-99999 to 999999

2.10	PASS	**Enable or disable password**
N		Password inactive
Y		Password active – press UNITS, enter numeric password and press ENTER. The password must be a minimum of 3 digits and no longer than 6 digits.

2.11	CW or 8200	**Enable Checkweigh Mode** To change mode to alternative mode select Yes. Then exit parameter menu and power cycle the scale to take effect. When powering back on the scale will show 8200 to enter standard mode or TO CW for checkweigh mode. Operation differences are shown as Standard Operation vs. Checkweigh Operation throughout the manual.
N		**Do not change operational mode**
Y		Change operational mode

Fiber Optic Port 1 - 3FIB1

3.1	D.O.1	**Data Output Mode Port 1**
T.O.D		**Transmit on demand. Transmit when the PRINT button is pressed.**
A.P.1		Auto Print 1. Transmit once only when scale becomes stable.
A.P.2		Auto Print 2. Transmit once only when scale becomes stable. Scale must return to, or below, the threshold range (2.5 THS).
A.P.3		Auto Print 3. Transmit once when the scale stabilizes within the ACCEPT range. Weight must fall below the threshold value (2.5 THS) before transmitting again. ONLY AVAILABLE IN CHECKWEIGH OPERATION
A.P.4		Auto Print 4. Transmit first stable weight outside of threshold. Transmission happens when weight returns to threshold range (2.5 THS).
A.P.5		Auto Print 5. Transmit the last stable weight outside of threshold. Transmission happens when weight returns to threshold range (2.5 THS).
T1		Transmits every 1 second.
T5		Transmits every 5 seconds.
T60		Transmits every 60 seconds.
C.P.		Continuous Print. Transmit when display is updated. Approximately every 1/10th of a second.
OFF		Port disabled

Refer to Data Communications section for more details

Note: only one communication port can have a timed output mode (t1, t5, t60, or CP)

3.2	FOR.1	**Data Output Format Port 1**
FO		**Basic output format**
2D		Basic Dual Print Format. Includes Kilogram weight.
SSP		Basic Output for label printer
F9		Model 8000 emulation
LB1		User definable print string with default values
LB2		User definable print string with default values
LB3		User definable print string with default values
LB4		User definable print string
BO		WinSPC compatibility format
D3		Serial protocol for output control (sets baud rate to 57.6K)
RD		Remote Display format

Refer to Data Communications section for more details

3.3	BR.1	**Baud Rate Port 1**
12		1200 baud
24		2400 baud
48		4800 baud
96		**9600 baud**
14.4		14,400 baud
19.2		19,200 baud
28.8		28,800 baud
38.4		38,400 baud

Fiber Optic Port 2 - 4FID2

4.1	D.O.2	Data Output Mode Port 2
T.O.D		**Transmit on demand. Transmit when the PRINT button is pressed.**
A.P.1		Auto Print 1. Transmit once only when scale becomes stable.
A.P.2		Auto Print 2. Transmit once only when scale becomes stable. Scale must return to, or below, the threshold range (2.5 THS).
A.P.3		Auto Print 3. Transmit once when the scale stabilizes within the ACCEPT range. Weight must fall below the threshold value (2.5 THS) before transmitting again. ONLY AVAILABLE IN CHECKWEIGH OPERATION
A.P.4		Auto Print 4. Transmit first stable weight outside of threshold. Transmission happens when weight returns to threshold range (2.5 THS).
A.P.5		Auto Print 5. Transmit the last stable weight outside of threshold. Transmission happens when weight returns to threshold range (2.5 THS).
T1		Transmits every 1 second.
T5		Transmits every 5 seconds.
T60		Transmits every 60 seconds.
C.P.		Continuous Print. Transmit when display is updated. Approximately every 1/10th of a second.
OFF		Port disabled

Refer to Data Communications section for more details

Note: only one communication port can have a timed output mode (t1, t5, t60, or CP)

4.2	FOR.2	Data Output Format Port 2
F0		**Basic output format**
2D		Basic Dual Print Format. Includes Kilogram weight.
SSP		Basic Output for label printer
F9		Model 8000 emulation
LB1		User definable print string with default values
LB2		User definable print string with default values
LB3		User definable print string with default values
LB4		User definable print string
B0		WinSPC compatibility format
D3		Serial protocol for output control (sets baud rate to 57.6K)

Refer to Data Communications section for more details

4.3	BR. 2	**Baud Rate Port 2**
12		1200 baud
24		2400 baud
48		4800 baud
96		**9600 baud**
14.4		14,400 baud
19.2		19,200 baud
28.8		28,800 baud
38.4		38,400 baud

Standard Operation Setpoints and Outputs – 9 OPER

9.4	S.O.	Setpoint Operation	
NO		**Do not enter Setpoint Operation**	
YES		Press ZERO then UNITS to enter menu below	
		SP 1-8	**Setpoint Mode**
		OFF	**Setpoint off**
		HA	Active High (wt≥setpt$_x$)
		LA	Active Low (wt≤setpt$_x$)
		HS	Active High (wt≥setpt$_x$): only stable weights
		LS	Active Low (wt≤setpt$_x$): only stable weights
		HAL	Active High (wt≥setpt$_x$): Latching to Threshold Level (2.5 THS)
		LAL	Output Active Low (wt≤setpt$_x$): Latching to Threshold Level
		HSL	Output Active High (wt≥setpt$_x$): Latching to Threshold Level (2.5 THS) and stable weight
		LSL	Output Active Low (wt≤setpt$_x$): Latching to Threshold Level (2.5 THS) and stable weight
		BA_	Band, Active High, only one setpoint activates at a time. (wt≥setpt$_x$&wt< setpt$_{x+1}$) (not available on SP8)
		BS_	Band, Active High, only one setpoint activates at a time. (wt≥setpt$_x$&wt< setpt$_{x+1}$): only stable weights. (not available on SP8)
		BSL	Band, Active High, only one setpoint activates at a time. (wt≥setpt$_x$&wt< setpt$_{x+1}$): Latching to Threshold Level (2.5 THS) and stable weight. (not available on SP8)
		FIL*	Tank fill operation. * SP2 only and in standard mode only. See tank fill section for details.

9.5	SW	**Setpoint Weight Operation** Weight that is used to evaluate the Setpoint logic
DSP		**Currently displayed weight**
NET		Net weight
GRS		Gross weight

9.6	PRE	**Preact Adjustment % Configuration**	
NO		**Do not enter menu**	
YES		Press ZERO then UNITS to enter menu below	
		P1-8	**Preact Configuration**
		xx	Key in preact adjustment % and press enter Range: 1 to 90 %

9.7	OUT	**Output Configuration**	
NO		**Do not enter Output selection menu**	
YES		Enter menu	
		01-08	**Output Configuration**
		OFF	**Output is deactivated**
		SP1	Setpoint 1 used for output logic
		SP2	Setpoint 2 used for output logic
		SP3	Setpoint 3 used for output logic
		SP4	Setpoint 4 used for output logic
		SP5	Setpoint 5 used for output logic
		SP6	Setpoint 6 used for output logic
		SP7	Setpoint 7 used for output logic
		SP8	Setpoint 8 used for output logic
		THS	Weight below threshold level (2.5 THS) used for output logic

Checkweigh Operation Setpoints and Outputs – 9 OPEr

9.1	C.O.	Checkweigh Operation
3A		**Three band checkweighing** **Checkweigh status continuously active.**
3S		Three band checkweighing Only active while weight is stable and inactive while the scale is in motion.
3T		Three band checkweighing Only active while the weight is above the threshold value (2.5 THS) and inactive when below.
3TL		Three band checkweighing Only active while weight is above the threshold value. Once OVER is activated, it will remain active until the weight falls below the threshold value (2.5 THS).
3B		Three band checkweighing Only active while weight is stable and above the threshold value (2.5 THS). Inactive while the scale is in motion or below the threshold value.
3BL		Three band checkweighing Only active while the weight is stable and above the threshold value (2.5 THS). OVER will remain active until the weight falls below the threshold. UNDER and ACCEPT deactivate while the scale is in motion or below the threshold value.
5A		Five band checkweighing Continuously active
5S		Five band checkweighing Only active while weight is stable and inactive while the scale is in motion.
5T		Five band checkweighing Only active while the weight is above the threshold value (2.5 THS) and inactive when below.
5B		Five band checkweighing Only active while weight is stable and above the threshold value (2.5 THS). Inactive while the scale is in motion or below the threshold value.
0A		Zero band checkweighing Continuously active See 0.U. parameter (9.3 O.U.) for tolerance values
0S		Zero band checkweighing Active only when the scale is stable See 0.U. parameter (9.3 O.U.) for tolerance values
OFF		Checkweighing feature not active

9.2	C.E.	**Checkweigh Limit Entry**
SCR		**Scroll from recalled value: Use the F1 (OVER) or F2 (UNDER) button to recall a limit. Then use the F1 (OVER) and F2 (UNDER) buttons to increase or decrease the recalled target value. Keyboard entry also supported.**
SCS		Scroll from reference weight: Place an item on the platform and press the F1 (OVER) or F2 (UNDER) button to enter that weight as a target value. The F1 (OVER) and F2 (UNDER) buttons can then be used to increase or decrease the value. Keyboard entry also supported.
PB		Reference weight only: Place an item on the platform and press the F1 (OVER) or F2 (UNDER) button to enter that weight as a target value.

9.3	O.U.	**Zero Band Checkweighing Limits** Only applicable when 9.1 C.O. is set to 0A or 05
1		+/- 1 division
2		+/- 2 divisions
3		+/- 3 divisions
4		+/- 4 divisions
5		+/- 5 divisions
7		+/- 7 divisions
10		**+/- 10 divisions**
15		+/- 15 divisions
20		+/- 20 divisions
30		+/- 30 divisions

9.7	OUT	**Output Configuration**	
NO		**Do not enter Output selection menu**	
YES		Enter menu	
		o1-8	**Output Configuration**
		OFF	**Output is deactivated**
		THS	Weight below threshold level (2.5 THS) used for output logic
		LO	Low annunciator used for output logic
		UDR	Under annunciator used for output logic
		ACC	Accept annunciator used for output logic
		OVR	Over annunciator used for output logic
		HI	High annunciator used for output logic

Exit - 99 don

10.1	DONE	**Exit and save changes**
N		**Do not exit**
Y		Save changes and exit – press UNITS to exit

Data Communications

To confirm data has been transmitted, the display will show a "r" in the leftmost digit.

Transmit on Demand (TOD)
In this mode, scale data is transmitted whenever PRINT is pressed, a remote switch configured for a PRINT command is pressed, or a print request is received at the serial port. The scale must be stable and the scale value must be valid before the data is transmitted.

Timer 1 (T 1)
Transmits every 1 second. Readings which occur when the scale is in motion are indicated out by the abbreviation "MOT." after the weight data.

Timer 5 (T5)
Transmits every 5 seconds. Readings which occur when the scale is in motion are indicated out by the abbreviation "MOT." after the weight data.

Timer 60 (T60)
Transmits every 60 seconds. Readings which occur when the scale is in motion are indicated out by the abbreviation "MOT." after the weight data.

Continuous Data Transmission (CP)
Data is transmitted each time the scale display updates. Readings which occur when the scale is in motion are indicated out by the abbreviation "MOT." after the weight data.

Auto Print 1 (AP 1)
Auto Print 1 transmits the first stable scale reading each time the scale leaves motion.

Auto Print 2 (AP2)
Auto Print 2 transmits the first stable scale reading following the scale leaving motion and above the adjustable threshold level. To adjust the Threshold level as a % of capacity, see the Threshold Level (2.5 THS) parameter. In Auto Print 2, no further readings will be sent until the scale returns to weight reading that is below the adjustable threshold level.

Auto Print 3 (AP3) Checkweigh Mode Only
Auto Print 3 transmits the first stable scale reading following the scale leaving motion, within the ACCEPT band and above the adjustable threshold level. To adjust the Threshold level as a % of capacity, see the Threshold Level (2.5 THS) parameter. In Auto Print 3, no further readings will be sent until the scale returns to weight reading that is below the adjustable threshold level.

Auto Print 4 (AP4)
Auto Print 4 transmits the first stable scale reading following the scale leaving motion that is above the adjustable threshold level. Transmission does not occur until the scale returns below the threshold value. To adjust the threshold level as a % of capacity, see the Threshold Level (2.5 THS) parameter.

Auto Print 5 (AP5)

Auto Print 5 transmits the last stable scale reading following the scale leaving motion that is above the adjustable threshold level. Transmission does not occur until the scale returns below the threshold value. To adjust the threshold level as a % of capacity, see the Threshold Level (2.5 THS) parameter.

Data String Formatting

Many predefined data formats are available. This allows for flexibility when communicating with a database, printer, remote display or other devices.
The LB1-4 custom data strings provide the opportunity to define a custom print string up to 64 characters in length.

Note: Lb:oz unit is not supported in data strings.

	Print String	**Description**
F0	Standard Output Format <STX><p><xxxx.xx><SP><uu><SP> <MOT><CR><LF> Sample Print String ±--10.05-lb Note: "-" represents a space	**<STX>** Start of Text (02h) **<p>** Weight Polarity Negative weight "-", positive weight space (20h) **<xxxx.xx>** Weight Data fixed field of 6 digits plus decimal. In overload or underload "-------". Leading zeros are spaces (20h). **<uu>** Displayed Units "lb", "kg", "oz", "g" **<MOT>** (Available only in Continuous print mode) Motion Status Appends "MOT" to the print string when printing while in motion **<SP>** Line Space (20h) **<CR>** Carriage Return (0dh) **<LF>** Line Feed (0Ah)
2d	Dual Unit lb and kg Print Output Format <STX><p><xxxx.xx><SP><uu><SP> <MOT><CR><LF> <(><p><xxxx.xx><SP><kg><SP><)><MO T><CR><LF> Sample Print String ±--10.05-lb ±---4.56-kg Note: "-" represents a space	**<STX>** Start of Text (02h) **<p>** Weight Polarity Negative weight "-", positive weight space (20h) **<xxxx.xx>** Weight Data fixed field of 6 digits plus decimal. In overload or underload "-------". Leading zeros are spaces (20h) **<uu>** Displayed Units "lb", "kg", "oz", "g" **<MOT>** (Available only in Continuous print mode) Motion Status Appends "MOT" to the print string when printing while in motion **<SP>** Line Space (20h) **<CR>** Carriage Return (0dh) **<LF>** Line Feed (0Ah)

	Print String	Description
SSP	Label Printer Output Format <FR”L1”><LF><?><LF><p><xxxx.xx><LF><uu><LF><"GS"><LF><MOT><LF><p><xxxx.xx><LF><kg><LF><P1,1><LF> Sample Print String FR"L1" ? ±--10.05 lb GS MOT ±---4.56 kg P1,1 Note: “-” represents a space	**<p>** Weight Polarity Negative weight “-”, positive weight space (20h) **<xxxx.xx>** Weight Data fixed field of 6 digits plus decimal. In overload or underload “-------”. Leading zeros are spaces (20h) **<uu>** Displayed Units “lb”, “kg”, “oz”, “g” **<MOT>** (Available only in Continuous print mode) Motion Status Appends “MOT” to the print string when printing while in motion **<SP>** Line Space (20h) **<CR>** Carriage Return (0dh) **<LF>** Line Feed (0Ah)
F9	Prints current weight, units, and “grs” or “net”. <STX><p><xxxx.xx><SP><uu><SP><grs><MOT><CR><LF> Sample Print String ±--10.05-lb-grs Note: “-” represents a space	**<STX>** Start of Text (02h) **<p>** Weight Polarity Negative weight “-”, positive weight space (20h) **<xxxx.xx>** Weight Data fixed field of 6 digits plus decimal. In overload or underload “-------”. Leading zeros are spaces (20h) **<uu>** Displayed Units “lb”, “kg”, “oz”, “g” **<grs>** “grs” or “net” for gross or net weights **<MOT>** (Available only in Continuous print mode) Motion Status Appends “MOT” to the print string when printing while in motion **<SP>** Line Space (20h) **<CR>** Carriage Return (0dh) **<LF>** Line Feed (0Ah)

	Print String	Description
Lb1	Custom Data String 1 (\x\w \u \m\r\l) <STX><p><xxxx.xx><SP><uu><SP> <MOT><CR><LF> Sample Print String ±--10.05-lb Note: “-” represents a space	**<STX>** Start of Text (02h) **<p>** Weight Polarity Negative weight “-”, positive weight space (20h) **<xxxx.xx>** Weight Data fixed field of 6 digits plus decimal. In overload or underload “-------”. Leading zeros are spaces (20h) **<uu>** Displayed Units “lb”, “kg”, “oz”, “g” **<MOT>** (Available only in Continuous print mode) Motion Status Appends “MOT” to the print string when printing while in motion **<SP>** Line Space (20h) **<CR>** Carriage Return (0dh) **<LF>** Line Feed (0Ah)
Lb2	Custom Data String 2 (\x\w \u \m\r\l) <STX><p><xxxx.xx><SP><uu><SP> <MOT><CR><LF> Sample Print String ±--10.05-lb-ACCEPT Note: “-” represents a space	**<STX>** Start of Text (02h) **<p>** Weight Polarity Negative weight “-”, positive weight space (20h) **<xxxx.xx>** Weight Data fixed field of 6 digits plus decimal. In overload or underload “-------”. Leading zeros are spaces (20h) **<uu>** Displayed Units “lb”, “kg”, “oz”, “g” **<MOT>** (Available only in Continuous print mode) Motion Status Appends “MOT” to the print string when printing while in motion **<SP>** Line Space (20h) **<CR>** Carriage Return (0dh) **<LF>** Line Feed (0Ah)

	Print String	Description
Cb3	Custom Data String 3(\xID:\i \w \u \m\r\l) <STX><"ID:"><SP><p><xxxx.xx><SP><uu><SP><MOT><CR><LF> Sample Print String ID:00-±--10.05-lb Note: "-" represents a space	**<p>** Weight Polarity Negative weight "-", positive weight space (20h) **<xxxx.xx>** Weight Data fixed field of 6 digits plus decimal. In overload or underload "-------". Leading zeros are spaces (20h) **<SP>** Line Space (20h) **<uu>** Displayed Units "lb", "kg", "oz", "g" **<MOT>** (Available only in Continuous print mode , non-LFT) Motion Status Appends "MOT" to the print string when printing while in motion. **<CR>** Carriage Return (0dh) **<LF>** Line Feed (0Ah)
Cb4	Custom Data String 4(\a \u \r\l\c\r\lP1\r\l) <accumulator><SP><uu><SP> <CR><LF><counter><CR><LF>"P1" <CR><LF> Sample Print String +--10.05-lb- ----36 P1 Note: "-" represents a space	<+/-**xxxx.xx** > Weight Data fixed field of 6 digits plus decimal. In overload or underload "-------". Leading zeros are spaces (20h) space (20h) **<uu>** Displayed Units "lb", "kg", "oz", "g" space (20h) **<CR>** Carriage Return (0dh) **<LF>** Line Feed (0Ah) <xxxxxx>counter, Leading zeros are spaces (20h) **<CR>** Carriage Return (0dh) **<LF>** Line Feed (0Ah) **<CR>** Carriage Return (0dh) **<LF>** Line Feed (0Ah)
b0	Prints weight with polarity and units <p><xxxx.xx><SP><uu><SP><CR><LF> Sample Print String ±--10.05-lb Note: "-" represents a space	**<p>** Weight Polarity Negative weight "-", positive weight space (20h) **<xxxx.xx>** Weight Data fixed field of 6 digits plus decimal. In overload or underload "-------". Leading zeros are spaces (20h). **<SP>** Line Space (20h) **<uu>** Displayed Units "lb", "kg", "oz", "g" **<CR>** Carriage Return (0dh) **<LF>** Line Feed (0Ah)
d3	Live Scale (Virtual) Display format, Prints current weight, units, annunciators, checkweigh status, and output status.	**<"^">** caret (5Eh) **<p>** Weight Polarity

	<"^"><p><xxxx.xx><ut><an><chk1-4> <chk5-8><out1-4><out5-8><ETX> Sample Print String ±--10.05000000 Note: “-” represents a space	Negative weight printed as “-”, positive weight is printed as a space (20h). **<xxxx.xx>** Weight Data fixed field of 6 digits plus decimal. In overload, or underload “-------” is printed. Leading zeros are printed as spaces (20h). **<ut>** Displayed Units lb = 0(30h), kg = 1(31h), oz = 2(32h), g = 3(33h), lb:oz = 4(34h) **<an>** Annunciators all off = 0(30h), all on = ?(37h) ZERO = bit 0 BATT = bit 1 MOT = bit 2 **<chk1-4>** Setpoint status 1-4. all off = 0(30h), all on = ?(3fh) Setpt 1 = bit 0 Setpt 2 = bit 1 Setpt 3 = bit 2 Setpt 4 = bit 3 **<chk5-8>** Setpoint status 5-8. all off = 0(30h), all on = ?(3fh) Setpt 5 = bit 0 Setpt 6 = bit 1 Setpt 7 = bit 2 Setpt 8 = bit 3 **<out1-4>** Output status 1-4 all off = 0(30h), all on = ?(3fh) out 1 = bit 0 out 2 = bit 1 out 3 = bit 2 out 4 = bit 3 **<out5-8>** Output status 5-8 all off = 0(30h), all on = ?(3fh) out 5 = bit 0 out 6 = bit 1 out 7 = bit 2 out 8 = bit 3 <ETX> End of Text (03h)

Custom Data String Configuration

Command	Length	Description
\ax	6-8	Accumulated weight, with weight format “x” (x = 1-5)
\B	0	Clears the Accumulator and Counter
\BS	4	Battery Status. Low: “batt” OK: “BATT”
\c1	7	Accumulation counter, 7 digits, leading spaces
\c2	7	Accumulation counter, 7 digits, leading zeros
\D1O	Up to 40	Product description 1, up to 40 characters. Field length = number of characters entered
\D1F	40	Product description 1, all 40 characters. Trailing spaces added where no entry exists
\D2O	Up to 40	Product description 2, up to 40 characters. Field length = number of characters entered
\D2F	40	Product description 2, all 40 characters. Trailing spaces added where no entry exists
\d	1-3	Motion aperture (“0.5”, “1”, “2”, “3”, “5”, “10”)
\e	4	Threshold: 2 digits, decimal, and “%”
\hxx	1	HEX byte. “xx” can be 00 through FF
\IO	Up to 20	Current Product ID, up to characters. Field length = number of characters entered
\IF	20	Current Product ID, all 20 characters. Trailing spaces added where no entry exists
\l	1	Linefeed. ASCII 0x0A
\m	0 or 3	Motion status. “MOT” if in motion, no output if stable
\Nx	4	Setpoint “x” operation (x = 1-8) Setpoint number, colon, 2 digits
\nx	6-8	Current NET weight, with weight format “x” (x = 1-5)
\Ox	4	Output “x” operation (x = 1-8). Setpoint number, colon, 2 digits
\Px	9	Preact “x” weight (x = 1-8). Preact number, colon, 6 digits with decimal
\POx	Up to 40	Product field “x” (x = 1-8), up to 40 characters characters. Field length = number of characters entered
\PFx	40	Product field “x” (x = 1-8), all 40 characters. Trailing spaces added where no entry exists
\P9	5	Product field 9 (counter). 5 digits with leading zeros
\Qx	5	Preact percentage “x” (x = 1-8). Preact number, colon, space, with 2 digits for percentage.
\qx	6-8	Current GROSS weight, with weight format “x” (x = 1-5)
\R	0	Clears TARE and places scale in the GROSS MODE
\r	1	Carriage return. ASCII 0x0D
\Sx	10	Setpoint weight “x” (x = 1-8). Setpoint number, colon, space, and 6 digits with decimal
\ts	3	Current TARE status, “grs” or “net”
\tx	6-8	Current TARE weight, with weight format “x” (x = 1-5)
\u	1-2	Current unit. “lb”, “kg”, “g”, “oz”. Two characters except for grams which is one

\wx	6-8	Current weight, with weight format “x” (x = 1-5)
\x	1	Start of text character. ASCII 0x02
\y	1	Current weight polarity. “-“ or a space
\y0	1	Current weight polarity. “-“ or “0”
\Z	0	ZERO command

“x” Weight Formats	
1	8 total characters. Polarity, 6 digits + decimal with leading spaces.
2	8 total characters. Polarity, 6 digits + decimal with leading zeros.
3	7 total characters. No polarity, 6 digits + decimal with leading spaces.
4	7 total characters. No polarity, 6 digits + decimal with leading zeros.
5	6 total characters. No polarity, 6 digits no decimal with leading zeros

Plain text can be inserted into the data string. No control character or slash is necessary for plain text entry.

To download a custom data string, the string must be prefaced by a command to tell the indicator to expect a custom print string.

ELx<string>↵ Enter (Download) custom data string
RLx↵ Read (Upload) custom data string

x is the label buffer number (1 to 4)
↵ is carriage return or enter key in terminal program

The data string can have up to 62 control characters. For example, the following string is 8 characters in length “\w\u\r\l”. The custom string is terminated and download by pressing the enter. To program this string for Lb1 location in the scale’s memory, send the following string: EL1\w\u\r\l↵

Once programmed, set the Output Format For parameter to Lb1 to activate the print string.

Remote Commands

All serial commands require a carriage return (0x0D) as a terminator. Commands, unless noted, can be entered on any communication option or serial port.

If you are not getting a response on any port, check to see if it is turned on in the parameter menu.

If no value is returned, "*" indicates a successful operation and "?" indicates an unsuccessful operation.

W, w	Weight is transmitted out all enabled ports in the format selected for each port
Wx, wx	Custom data string Lb1-4 can be requested to transmit out all ports. x = 1, 2, 3 or 4
P, p	Weight data is sent out Fiber Optic port 2 only
Px, px	Customer data string Lb1-4 can be requested to transmit out Fiber Optic port 2 only. x = 1, 2, 3, or 4
U, u	Causes the scale to switch to the next unit of measure. Same as if the UNITS button is pressed
Ux, ux	Causes the scale to switch to the unit of measure specified by x. x = 1, 2, 3, or 4 where 1=lb, 2=kg, 3=g, 4=oz
Z, z	Issues a ZERO command to the scale. Note: Scale will not zero if in motion or if an error is displayed
T, t	Issues a TARE command to the scale. Note: Scale will not TARE if in motion or if an error is displayed
G, g	Places the scale into gross weight mode
N, n	Places the scale into net weight mode. Note: The indicator will not be able to enter the net mode if a tare is not present
MD	The scale will transmit its model number
RV	The scale will transmit its revision number
ELx<data>	Load the user data string, specified by x (1-4), with the data in <data>. <data> can be up to 64 bytes. The indicator responds with an '*' if the command is successful or '?' if unsuccessful
RLx	Transmit the User data string stored in the location referenced by x

^Rxx.yy.	Request parameter setting in the format of calibration/setup menu group xx, sub-menu yy. For example: ^R02.05<0x0D> will cause the scale to transmit its threshold value on the port that this command was received on
^Exx.yy.	This command will enter data to the scale in calibration/setup menu group xx, menu yy. Scale must be in CAL menu
^RP	Reports the current product
^RPA	Lists all Product IDs on scale
^RFx	Report remote button function ‘x’ setting (x = 1 or 2)
^PX	Delete all products
^PD<data>	Delete one product Ex. ^PD1234
x1	Fiber Optic port 1 is echoed to Fiber Optic port 2
x2	Fiber Optic port 2 input is echoed to Fiber Optic port 2
x5	Scale displays raw counts
xc	Clears commands x1-x7

For a complete protocol, please request this document from Doran Technical Support at tech@doranscales.com.

Installation Instructions

Removing the Rear Panel

Place the indicator on a flat work surface with the front facing down. Using a 5/16 inch socket, remove all cover screws and flat metallic washers. Save screws and washers for later installation. The rear panel is now loose can be lifted from the main enclosure. Rear panel installation: Place the rear cover on the main enclosure. Install all screws and flat metallic washers. Tighten screws to 15 in-lb

WARNING

Take care not to damage any external or internal parts when removing and replacing the rear panel.

WARNING

Replace gasket if it shows wear or damage.

Cable Glands

Instructions for loosening cable glands (only those with metal stopper plugs), removing metal stopper plugs, reinserting metal stopper plugs, and re-tightening cable glands:

WARNING

Take care not to damage any external or internal parts when removing and replacing the metal stopper plugs.

Agro cable gland: 6.35 mm Stainless Steel (SS) plug removal and replacement. Tilt indicator towards its back so that the SS plug does not fall into the indicator when loosening and tightening the cord grip. Loosen and remove the cord grip cap and allow the SS plug to slide out. If the SS plug does not slide out, grip it with pliers and pull it out. Insert the SS plug into the cord grip and reattached the cap. Tighten the cap making sure the SS plug protrudes 0.050 inches - 0.150 inches. Tighten until the rubber insert begins to protrude or to a maximum torque of 5 Nm.

WARNING

Before installing field wiring to any devices in this system, disconnect any power sources. To prevent ignition hazards, take special care not to touch or accidentally damage any internal parts of Model 8100IS/8200IS Indicator/Remote Display, as this may impair intrinsic safety.

Internal Power Connections

External Power Connections (J6)	
DC Input	**Color**
-	Brown
+	Blue

Load Cell Connections

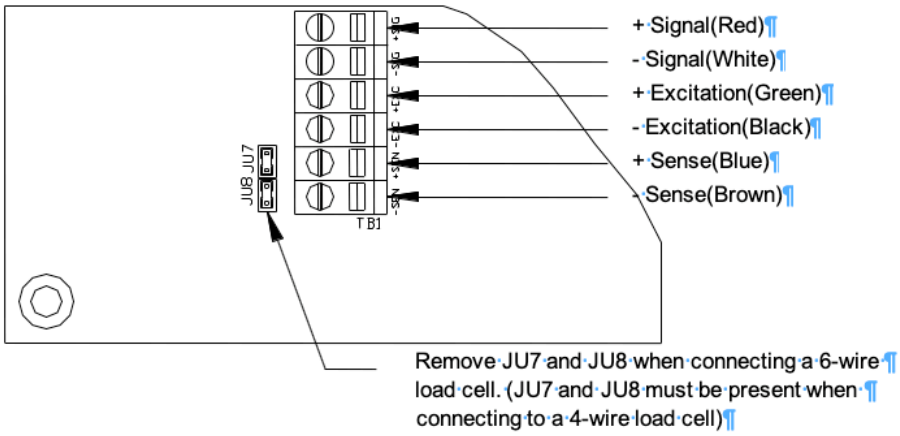

Load Cell (TB1)		
Pin #	Function	Wire Color
1	+ Load Cell Signal	Red
2	- Load Cell Signal	White
3	+ Load Cell Excitation	Green
4	- Load Cell Excitation	Black
5	+ Sense Signal	Blue
6	- Sense Signal	Brown

4 or 6 Wire Load Cell Jumper Settings	
JU7	In for 4 wire Out for 6 wire load cell connections
JU8	In for 4 wire Out for 6 wire load cell connections

Load cell connections are made through terminal block TB1 located at the bottom center of the main board. The power cord connects to terminal block J6 adjacent to the transformer.

These connections are accessible by removing the rear cover. Connect the load cell wires by inserting the tip of a flathead screwdriver into the rectangular hole located on the top of terminal block TB1. Use the screwdriver blade to open the adjacent slot. Insert the stripped end of a single load cell wire into the round cage opening. Be sure that the wire insulation is outside the terminal block cage to ensure a proper connection. Once the wire end has been inserted, remove the screwdriver. The wire will now be captured in the terminal slot.

When installing load cell wire connections, be sure to check the JU7 and JU8 jumper configuration. Remove JU7 and JU8 for a six-wire load cell or be sure JU7 and JU8 are in place for a four-wire load cell. Load cells must be certified for appropriate hazardous area and entity parameters. See note one on control drawing 900243

Uo 7.14 V, Io 0.7076 A, Po 0.895 W, Co 10.8 uF, Lo 71 uH

Scale Installation

Scale installation involves locating the weighing element(s) in the hazardous area and mounting the 8200IS Intrinsically Safe Indicator in a secure location, which may (or may not) be located in the hazardous area. Power for the 8200IS Indicator can be provided by either the Model 8BIS rechargeable battery or the Model 8AIS AC/DC Power Supply. The Model 8AIS AC/DC Power Supply provides a permanent power source while the 8BIS rechargeable battery must be removed from the hazardous area for charging. Only one power source can be used at a time.

The AC power supply for the 8AIS AC/DC Power Supply must be installed in conduit (or other cabling method approved by the National Electrical Code) with the appropriate junction boxes and seals for the hazardous location. The use of conduit for the power supply output, interface output and the load cell cables is not required. The use of conduit for these cables is a decision left to the Plant Safety Engineer and local building codes. All seals and accessories required to make the proper installation and maintain the separation of the hazardous and safe areas are the responsibility of the customer.

It is recommended that any cable runs that are part of the Intrinsically Safe circuit be marked with a bright blue tape. Blue cable may also be utilized.

All Intrinsically Safe wiring should be located more than 2 inches from Non-Intrinsically Safe wiring, unless separated by an insulating or ground partition. A 0.1 inch spacing must be maintained between intrinsically safe circuits.

All installation and / or maintenance should be coordinated with the plant engineer or the responsible personnel.

CAUTION

Although the Indicator is approved for use in hazardous locations, caution should always be observed in all areas designated as hazardous including the use of tools and equipment.

CAUTION

If there are any doubts concerning the classification of hazardous areas, the suitability of equipment for a hazardous location, or any questions about the installation, consult the Plant Engineer or personnel responsible for the installation.

WARNING

The display and key board area are considered to constitute an electrostatic discharge hazard. Clean only with a damp cloth.

The scale should be securely mounted using the supplied mounting bracket to a table, wall or under a cabinet to prevent the scale indicator from being accidentally dropped or damaged. The indicator should be mounted for easy removal of the battery pack for recharging purposes.

Electrical Ratings

See Control Drawing No. 900243 for inter-device connections and intrinsic safety entity parameters.

Model 8AIS:
Input: Normal Operation 115 Vac, 0.125 A; Um = 120 V, AC only
Output: See Control Drawing No. 900243.

Model 8BIS:
Input: See Control Drawing No. 900243.
Output: See Control Drawing No. 900243.

Model 8CHG:
Input: Normal Operation 120 Vac, 50-60 Hz, 0.125 A; Um = 120 V, AC only
Output: 7.8 Vdc, 0.125 A; See Control Drawing No. 900243.

Model 8FB:
Input: 6-12 V dc, 2.0 A or less.
Output: SELV/low voltage limited energy.

Model 8100IS/8200IS Indicator/Remote Display:
Input: See Control Drawing No. 900243.
Output: See Control Drawing No. 900243.

Model 8JBX:
Input: See Control Drawing No. 900243.
Output: See Control Drawing No. 900243.

Installation with the 8BIS Battery

The 8200IS Intrinsically Safe Weight Indicating System can be installed in hazardous locations using the 8BIS rechargeable battery. Battery operation permits the system to be used in locations where AC power is prohibited or is unavailable. When installing the system, it should be installed as a complete unit with the battery, indicator, weighing elements and options. Once the system is installed per the Control Drawing and the electrical circuit has been determined to be Intrinsically Safe, then the complete assembly with the options can be considered Intrinsically Safe.

The 8200IS Intrinsically Safe Weight Indicating System can be ordered as a complete system including a pre-installed weighing platform, 8200IS Indicator, Model 8BIS battery pack and Model 8CHG battery charger. The system can also be ordered without the weighing platform, which must be provided by the customer.

Battery Installation

The electronics located in the Model 8BIS battery pack forms an intrinsically safe system when one Indicator/Remote Display Models 8100IS/8200IS is connected to its intrinsically safe output cable as shown above, and the Indicator/Remote Display Models 8100IS/8200IS are suitable for use in hazardous areas as shown on this Control Drawing No. 900243. No other devices are suitable for direct connection to the intrinsically safe output cable of Model 8BIS, and the only additional devices/configurations that may be connected to the Indicator/Remote Display Models 810IS/820IS are shown on Control Drawing No. 900243.

The output current of the Model 8BIS is limited by a resistor such that the output voltage-current plot is a straight line drawn between open-circuit voltage and short-circuit current.

The 8200IS Intrinsically Safe Indicator, Model 8BIS and the platform are approved for use in the hazardous area per the Control Drawing. The Battery pack must be removed from the hazardous area and taken into the safe area to be recharged. The Battery pack must be charged with the Model 8CHG Battery Charger. The Model 8CHG battery charger MUST be located in the Safe area and is NOT approved for hazardous areas.

CAUTION

The Model 8CHG battery charger must be located in the Safe area and is NOT approved for hazardous areas

WARNING

There are no field serviceable parts in the 8BIS battery pack or 8CHG Charger. The power supply must be returned to Doran Scales, Inc. for service if a failure occurs.

Battery Pack Operation

The external intrinsically safe battery pack is located under the 8200IS indicator. The battery pack supplies power to the indicator through a cable with a military style connector. To remove the battery pack, power down indicator then disconnect the battery power supply cable from the rear of the 8200IS indicator by unscrewing the connector. Then loosen the two small black knobs and remove the battery pack by pulling up and outward on the battery pack handle. Do not remove the battery pack without first removing the battery power cable from the 8200IS rear panel. If any damage occurs to the connector or power cable, discontinue use immediately and contact Doran's Technical Support Department.

When the 8200IS indicates low battery, the indicator will cease to function in approximately thirty minutes. When the low battery warning appears, the battery should be recharged as soon as possible. The battery pack must be removed from the hazardous area for charging. Recharge time is typically 30 hours. Only the 8CHG battery charger can be used to charge the 8BIS battery pack. Do not use the 8CHG battery charger to charge any other batteries.

The 8CHG battery charger has one indicator on the top of the charger unit. The Ready light will be on when the charger is plugged into 115VAC (220VAC optional). If the Ready light remains off, 115VAC is not present, the battery is shorted, or the charger has a blown fuse.

To charge the 8BIS battery pack, remove the battery from the hazardous area. Plug the charger into a wall outlet. When plugged in, the charger will display a green READY light. If the green light is not lit, plug the charger into another outlet. Connect the battery pack to the charger by aligning the keyed connector and screwing the connector firmly to the power cable power receptacle on the front of the charger box. Do not force the connector, this is a sign that the keyed connector is not properly aligned with the charger receptacle.

To place the battery back into service, reinstall the battery pack by first securing the battery pack into the indicator's u-bracket with the small black knobs. Then reconnect the battery pack to the indicator by aligning the keyed connector and screwing the connector firmly to the power cable power receptacle on the rear panel. Do not force the connector, this is a sign that the keyed connector is not properly aligned with the charger receptacle.

Once charged, the battery pack will last 8 hours in of continuous use or 40 hours in a typical application using the automatic shutoff timer (single 350 Ω load cell), after which the indicator will provide a low battery warning on the display. Multiple load cells, Fiber Optic or other options will reduce battery life. For multiple load cell applications, battery life is significantly reduced. For example, with a four, 350 Ω load cell configuration, the low battery indication will begin at about 4 to 6 hours of continuous use. After the low battery indication begins, the indicator will operate for a while before the indicator will shut off. Load cells with higher input impedance values will provide longer life as will systems with fewer load cells. To significantly extend the battery life, enable the Unit On Timer parameter which will power down the scale automatically after a period of non-use. The default setting shuts off the indicator after 30 seconds of non-use.

The battery pack should be able to support at least 1000 recharges before the end of the battery life is reached. This is an estimate as many factors can affect battery life like, severe temperature changes and charging before the 8200IS displays Low Battery.

An optional extra battery pack can be ordered for situations that require uninterrupted operation of the scale. The battery pack may be left plugged in the charger until ready to use.

Installation with the 8AIS AC Power Supply

The Model 8AIS is an AC/DC power supply that can be used for more permanent installations or when regular power down situation is not desired. The power supply provides an intrinsically safe output and can be mounted in the hazardous areas provided the Control Drawing is followed. The power supply can also be mounted in the safe area with the output entering the hazardous area. The cable installation must comply with National Electrical Code requirements for hazardous location wiring. The power supply provides an intrinsically safe DC power source when properly installed.

The power supply supports 120VAC, 50/60 Hz operation. The 8AIS AC/DC Power Supply has been sealed and cannot be field serviced. The power supply has been designed to cease functioning under fault conditions such as shorted outputs, improper input voltage, excess current, etc. See Interconnect Extension Cable below for more information. The power supply must be returned to Doran Scales, Inc. for service if a failure occurs.

WARNING

There are no field serviceable parts in the 8AIS AC/DC Power Supply. The power supply must be returned to Doran Scales, Inc. for service if a failure occurs.

<u>AC Power Supply Installation in Hazardous Location</u>

The Model 8AIS can be installed within the hazardous area by following the proper guidelines outlined in the Control Drawing. An adapter cable, which connects the Intrinsically Safe Indicator to the AC/DC Power Supply, is provided when the AC/DC Power Supply is ordered. An extension interconnect cable can be assembled with parts provided with the AC/DC Power Supply (see Extension Cable below).

When only the included adapter cable is utilized, the power supply must be mounted within 1.5 meters of the 8200IS indicator. The Model 8AIS power supply and the indicator must be securely mounted. Prior to installation in a hazardous location, the plug on the power supply should be removed to permit the cord to be installed in rigid conduit. If a cord's strain relief is attached to the power supply, remove it from the female ½" conduit seal portion of the supply. Power to the Model 8AIS must be installed in ½" rigid conduit or The National Electrical Code approved alternate. The cord is then routed through the rigid conduit to a junction box approved for the area classification. The power connection is then completed in this junction box. When the conduit exits

the hazardous area, it must be properly sealed in accordance with The National Electrical Code. Additional seals may be required at the junction box.

The electronics located in the barrier circuit of Model 8AIS forms an intrinsically safe system when one Indicator/Remote Display Models 8100IS/8200IS is connected to its intrinsically safe output cable as shown in the Control Drawing, and the Indicator/Remote Display Models 8100IS/8200IS are suitable for use in hazardous areas as shown on this Control Drawing No. 900243. No other devices are suitable for direct connection to the intrinsically safe output cable of Model 8AIS, and the only additional devices or configurations that may be connected to the Indicator/Remote Display Models 8100IS/8200IS are shown on this Control Drawing No. 900243.

The output current of the Model 8AIS associated apparatus is limited by a resistor such that the output voltage-current plot is a straight line drawn between open-circuit voltage and short-circuit current.

Associated apparatus Model 8AIS is supplied with an enclosure suitable for the application in accordance with the National Electrical Code (ANSI/NFPA 70) for installation in the United States, the Canadian Electrical Code for installations in Canada, or other local codes, as applicable.

The associated apparatus Model 8AIS must be connected to a suitable ground electrode per the National Electrical Code (ANSI/NFPA 70), the Canadian Electrical Code or other local installation codes, as applicable. The resistance of the ground path must be less than 1 ohm.

Intrinsically safe circuits must be wired and separated in accordance with Article 504.20 of the National Electrical Code (ANSI/NFPA 70) or other local codes, as applicable.

This associated apparatus Model 8AIS has not been evaluated for use in combination with another associated apparatus.

AC Power Supply Installation In Safe Areas

The Model 8AIS AC/DC Power Supply can be installed within the safe area by following the proper guidelines outlined in the Control Drawing. A short output cable, which connects the Intrinsically Safe Indicator to the AC/DC Power Supply, is included when the AC/DC Power Supply is ordered. An optional extension cable can be purchased (see Interconnect Extension Cable below). This extension cable may exit the hazardous area provided it is installed in accordance with the National Electrical Code rules for hazardous location cabling. The extension cable makes the connection to the AC/DC power supply within the safe area. The DC output of the power supply is considered Intrinsically Safe and should be treated as an intrinsically safe output from a barrier.

Once mounted in the safe area, the Model 8AIS can be connected to the proper power supply utilizing the supplied power cord.

Extension Cable

The optional extension cable is used to extend the length of the power supply cable in situations that require a longer run of cable between the 8AIS AC/DC Power Supply and Intrinsically Safe Indicator. The maximum length is 7 meters.

Extension cable part numbers: WCB0234 – 3m long or WCB0235 – 6m long

WARNING **NON-WARRANTY DAMAGE TO THE POWER SUPPLY IS LIKELY IF THE OUTPUT IS CONNECTED TO A SHORTED OR LOW IMPEDANCE CIRCUIT. THE DC POWER CIRCUIT TO THE INDICATOR SHOULD BE CHECKED WITH AN OHMMETER BEFORE APPLYING POWER TO THE 8AIS POWER SUPPLY. A READING OF LESS THAN 1000Ωs INDICATES A PROBLEM. DO NOT APPLY POWER UNTIL THE CAUSE OF THE LOW IMPEDANCE IS FOUND AND CORRECTED.**

Remote Switch Connections

The remote switch terminal is found on the top of the main board. Remove the rear cover to access these connections. Connections are made by inserting each lead of the optional cable into the P2 terminal block. Connect Remote Switch between P2 terminal marked “SW1” and “GND” or “SW2” and “GND”.

P2 Option Connections		
Pin #	Function	Wire Color
1	Ground	Black
2	Switch 1 Input	White
3	Switch 2 Input	White
4	Ground	Black

Hazardous Area Fiber Optic Communications

The indicator includes two channels for communication. Fiber Optic communication is perfect for a hazardous location as it has no electrical potential, and does not create a hazard. Fiber Optic cable does not have to be run through conduit, saving much installation expense.

Field installation of the fiber optic cabling is permitted. When ordering one of these options please know approximately how much cable is needed to reach the safe area. The maximum length available without the use of signal boosters is 70 meters.

If you have purchased Doran's Fiber Optic Option and wish to communicate with a PC or printer in the safe area, you must also purchase Doran's 8FB fiber optic to RS-232 option. Third party conversion boxes will not operate with Doran's fiber optic option.

8FB Safe Area Fiber Optic Option

The Doran 8FB fiber optic to RS232 option, is a dual channel converter for use in the safe area only. The 8FB option converts the fiber optic communication into a RS232 signal to interface with a computer or printer. A serial cable with a female DB9 connector and a Class II power supply is provided with the 8FB option. Any fiber optic cabling provided with the system will be installed and included with the converter. The fiber optic connection to the indicator must be done per the Hazardous Area Fiber Optic Option instructions and control drawings.

Installation

The 8FB fiber optic converter must be located in the Safe area and is NOT approved for hazardous areas. Open the 8FB enclosure by removing the 4 screws located on the bottom of the converter. Insert fiber optic cable through strain relief on side panel. Loosen both fiber optic connector nuts and insert marked fiber optic cable into black RCV connector and other cable into the blue XMT connector. Tighten both fiber optic connector nuts to secure the cables and tighten side panel strain relief to hold cable in place. Close up convertor and reinstall the 4 screws. Insert power supply plug into power jack on side panel and plug in power supply into wall outlet. Connect the serial cable to a male DB9 connector on computer or printer. The indicator's default serial communication parameters are 9600 baud, 8 bit, 1 stop, no parity.

CAUTION

The 8FB fiber optic convertor must be located in the Safe area and is NOT approved for hazardous areas

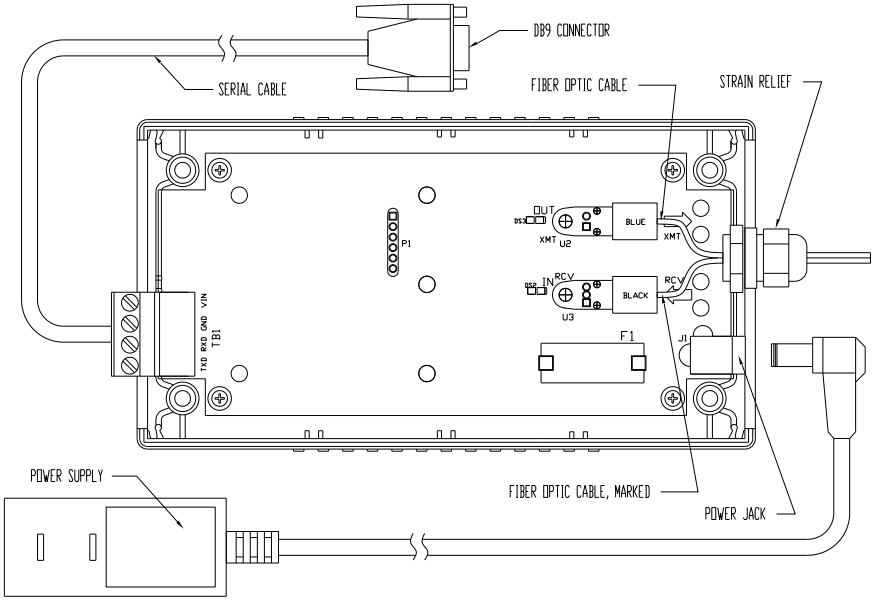

Fig. 8: 8FB Fiber Optic Option Connections

ECO #	REV	REVISIONS	DATE	APP
18-037	01	BLOCK CHANGED/ABBREVIATIONS/NOTES	5/7/18	J.T
18-073	02	UL MARKUPS	11/5/18	J.T
19-006	03	MORE UL MARKUPS	01/11/19	J.T
19-008	04	STANDARD CONFIGURATION	01/23/19	J.T
19-011	05	TABLE 2 INTRODUCTION	02/06/19	J.T
19-020	06	FINAL UL MARKUPS	03/01/19	J.T
20-010	07	PCA0368 R9 UPDATE FIBER OPTIC MOVE TO MAIN CIRCUIT BOARD	11/31/20	M.P

LOAD CELL AND SUMMING BOARD INSTALLATION DIAGRAM

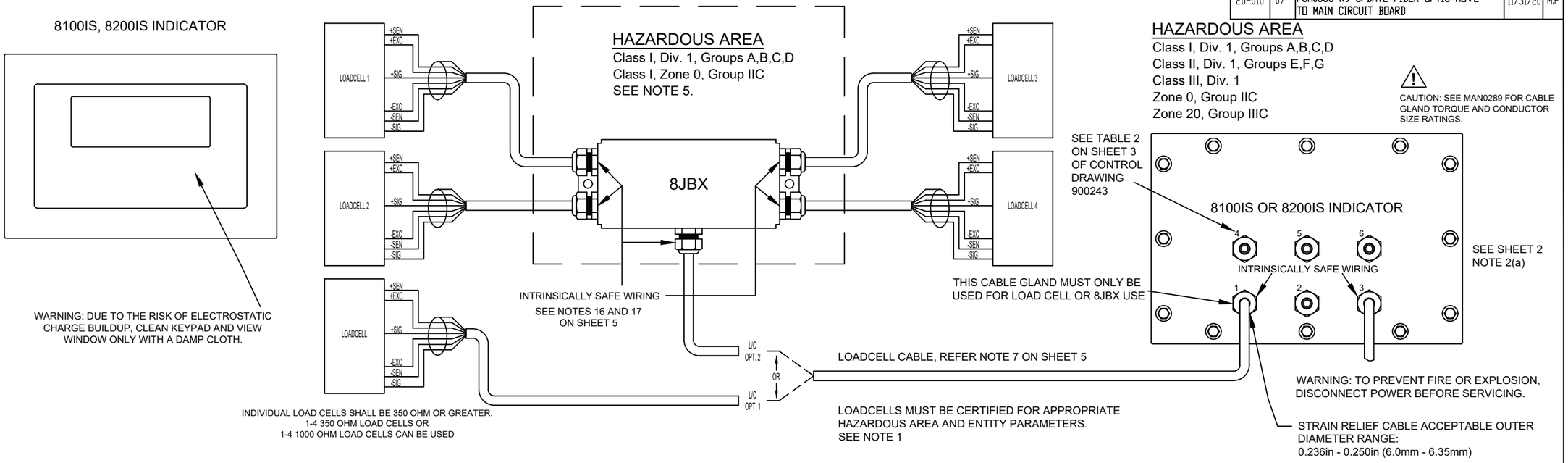

8100IS, 8200IS INDICATOR INTRINSICALLY SAFE OUTPUT WIRING AND LOADCELL CONFIGURATION JUMPERS

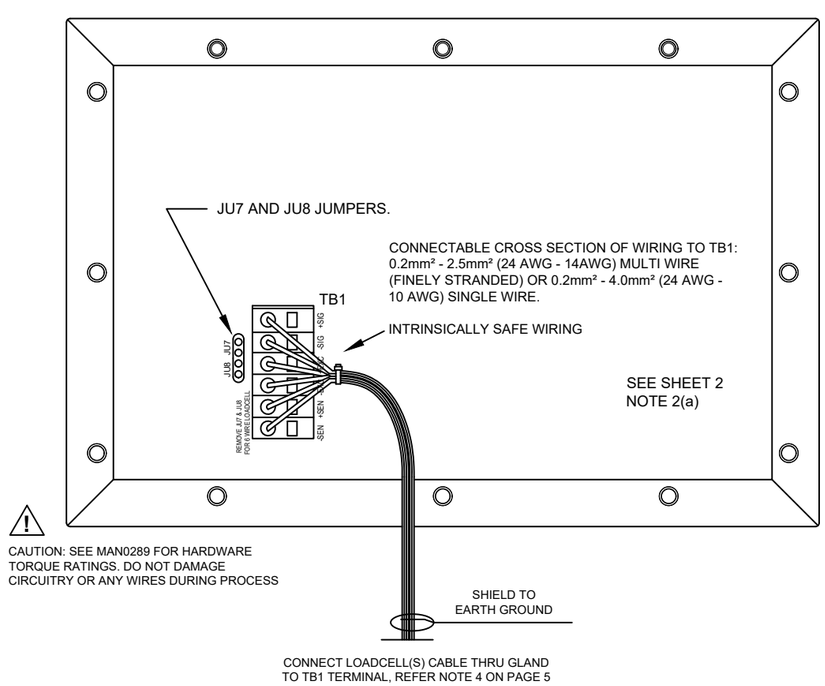

6-WIRE LOADCELL CONNECTION (REMOVE JU7 AND JU8)

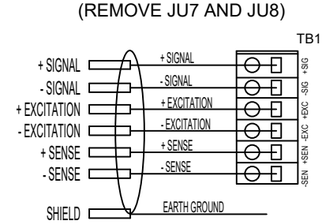

4-WIRE LOADCELL CONNECTION (INSERT JU7 AND JU8)

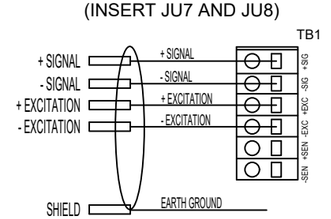

OUTPUT ENTITY PARAMETERS					
DESCRIPTION (LOCATION)	U_O	I_o	P_o	C_o	L_o
LOADCELL (TB1)	7.14 V	0.7076 A	0.895 W	10.8 uF	71 uH

1. THESE OUTPUTS MAY ALSO BE CONNECTED TO SIMPLE APPARATUS AS DEFINED IN ARTICLE 504.2 AND INSTALLED AND TEMPERATURE CLASSIFIED IN ACCORDANCE WITH ARTICLE 504.10(D) OF THE NATIONAL ELECTRICAL CODE (ANSI/NFPA 70), OR OTHER LOCAL CODES, AS APPLICABLE.
2. SELECTED INTRINSICALLY SAFE EQUIPMENT/LOADCELLS (FOR USE WITH THESE INTRINSICALLY SAFE DORAN OUTPUTS) MUST BE THIRD PARTY LISTED AS INTRINSICALLY SAFE FOR THE APPLICATION (UNLESS DEEMED SIMPLE APPARATUS PER NOTE 1), AND HAVE INTRINSICALLY SAFE ENTITY PARAMETERS CONFORMING WITH TABLE 1 BELOW

TABLE 1		
I.S. Equipment/Loadcells		I.S. Doran Outputs
V max (or Ui)	≥	Voc or Vt (or Uo)
I max (or Ii)	≥	Isc or It (or Io)
P max, Pi	≥	Po
Ci + Ccable	≤	Ca (or Co)
Li + Lcable	≤	La (or Lo)

3. SEE PAGE 5 (NOTES FOR PAGE 1 OF CONTROL DRAWING No. 900243)

WARNING

READ AND UNDERSTAND COMPLETELY USER MANUAL NO, MAN0289 FOR THESE DEVICES BEFORE INSTALLATION OR OPERATION

doran®

DORAN SCALES, INC.
www.doranscales.com

SYSTEM CONTROL DRAWING

DATE:	DRAWN BY:	DRAWING NUMBER	SHEET NUMBER	REV
11/31/20	J.TORRES	900243	SHEET 1 OF 5	07

ECO #	REV	REVISIONS	DATE	APP
18-037	01	BLOCK CHANGED/ABBREVIATIONS/NOTES	5/7/18	J.T
18-073	02	UL MARKUPS	11/5/18	J.T
19-006	03	MORE UL MARKUPS	01/11/19	J.T
19-008	04	STANDARD CONFIGURATION	01/23/19	J.T
19-011	05	TABLE 2 INTRODUCTION	02/06/19	J.T
19-020	06	FINAL UL MARKUPS	03/01/19	J.T
20-010	07	PCA0368 R9 UPDATE FIBER OPTIC MOVE TO MAIN CIRCUIT BOARD	11/31/20	M.P

POWER SUPPLY INSTALLATION DIAGRAM

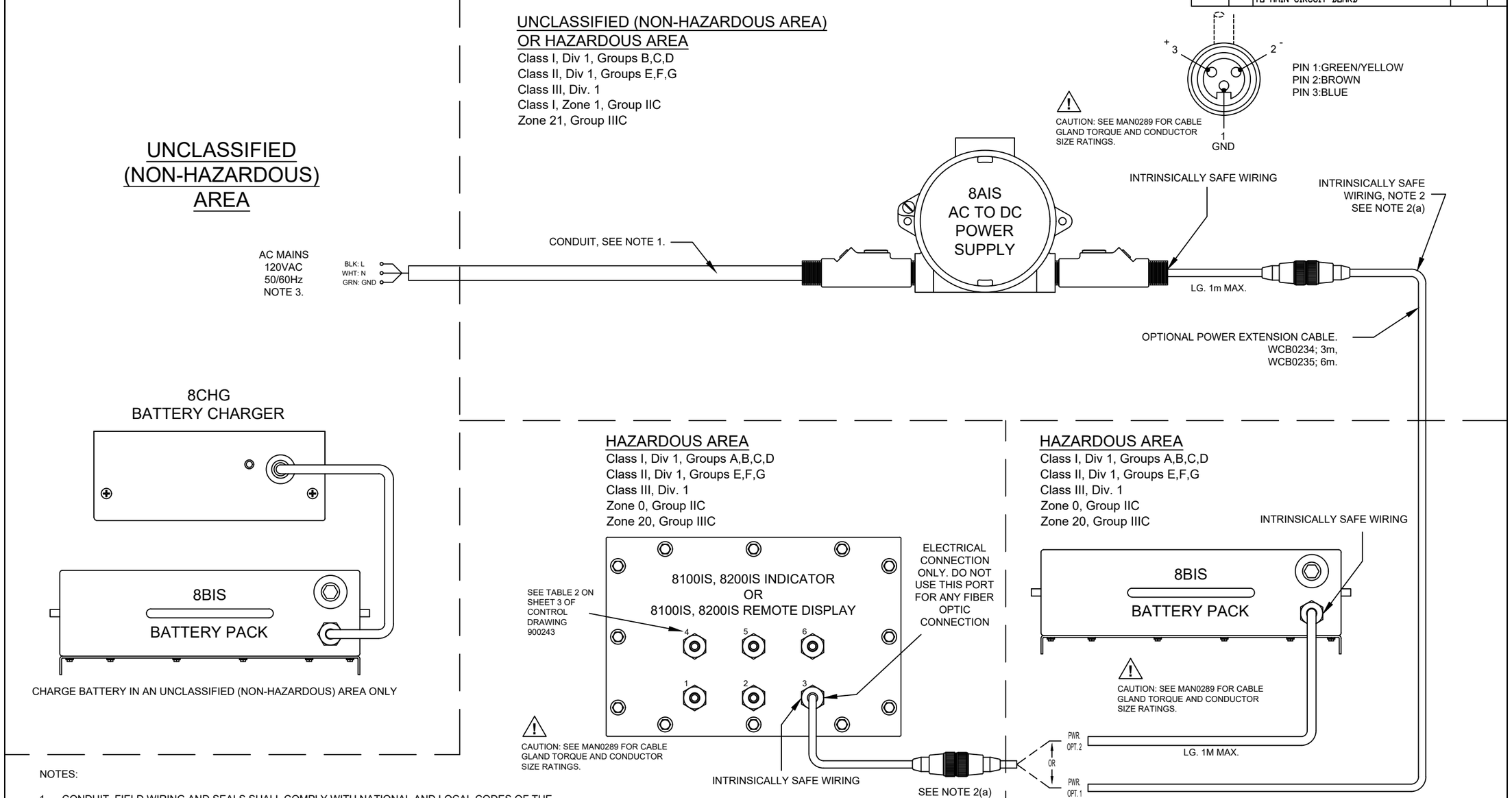

NOTES:

1. CONDUIT, FIELD WIRING AND SEALS SHALL COMPLY WITH NATIONAL AND LOCAL CODES OF THE AUTHORITY HAVING JURISDICTION (AHJ)
2. INTRINSICALLY SAFE WIRING BETWEEN POWER SUPPLY AND INDICATOR/REMOTE DISPLAY SHALL USE ONLY FACTORY SUPPLIED CABLES.
   2.a. BEFORE INSTALLATION, AND BEFORE CONNECTING/DISCONNECTING ANY FACTORY SUPPLIED CABLES, OR ANY FIELD WIRING FOR THE 8100IS/8200IS INDICATOR/REMOTE DISPLAY, ENSURE CONNECTORS ARE FREE OF DUST/DEBRIS AND ENSURE NO POTENTIALLY IGNITABLE DUST ATMOSPHERES ARE PRESENT.
3. MAXIMUM NON-HAZARDOUS LOCATION VOLTAGE (Um) MUST NOT EXCEED 120V AND MUST BE AC ONLY.
4. ALL GROUNDING CONNECTIONS MUST BE LESS THAN 1 OHM RESISTANCE TO EARTH GROUND.
5. OPERATING AMBIENT TEMPERATURE RANGE: -10°C TO +40°C
6. BATTERY CHARGER RATED AMBIENT IS -10°C TO +30°C
7. INTRINSICALLY SAFE WIRING SHALL BE IDENTIFIED AS SUCH WITH LABELS PLACED NO MORE THAN 7.62M (25FT) APART. THE COLOR LIGHT BLUE IS INTERNATIONALLY RECOGNIZED AS IDENTIFYING INTRINSICALLY SAFE WIRING.
8. SEE PAGE 5 (NOTES FOR PAGE 2 OF CONTROL DRAWING No. 900243)

WARNING

READ AND UNDERSTAND COMPLETELY USER MANUAL NO, MAN0289 FOR THESE DEVICES BEFORE INSTALLATION OR OPERATION

doran®

DORAN SCALES, INC.
www.doranscales.com

SYSTEM CONTROL DRAWING

DATE:	DRAWN BY:	DRAWING NUMBER	SHEET NUMBER	REV
11/31/20	J.TORRES	900243	SHEET 2 OF 5	07

ECO #	REV	REVISIONS	DATE	APP
18-037	01	BLOCK CHANGED/ABBREVIATIONS/NOTES	5/7/18	J.T
18-073	02	UL MARKUPS	11/5/18	J.T
19-006	03	MORE UL MARKUPS	01/11/19	J.T
19-008	04	STANDARD CONFIGURATION	01/23/19	J.T
19-011	05	TABLE 2 INTRODUCTION	02/06/19	J.T
19-020	06	FINAL UL MARKUPS	03/01/19	J.T
20-010	07	PCA0368 R9 UPDATE FIBER OPTIC MOVE TO MAIN CIRCUIT BOARD	11/31/20	M.P

FIBER OPTIC INTERFACE

CAUTION: SEE MAN0289 FOR CABLE CLAND TORQUE AND CONDUCTOR SIZE RATINGS.

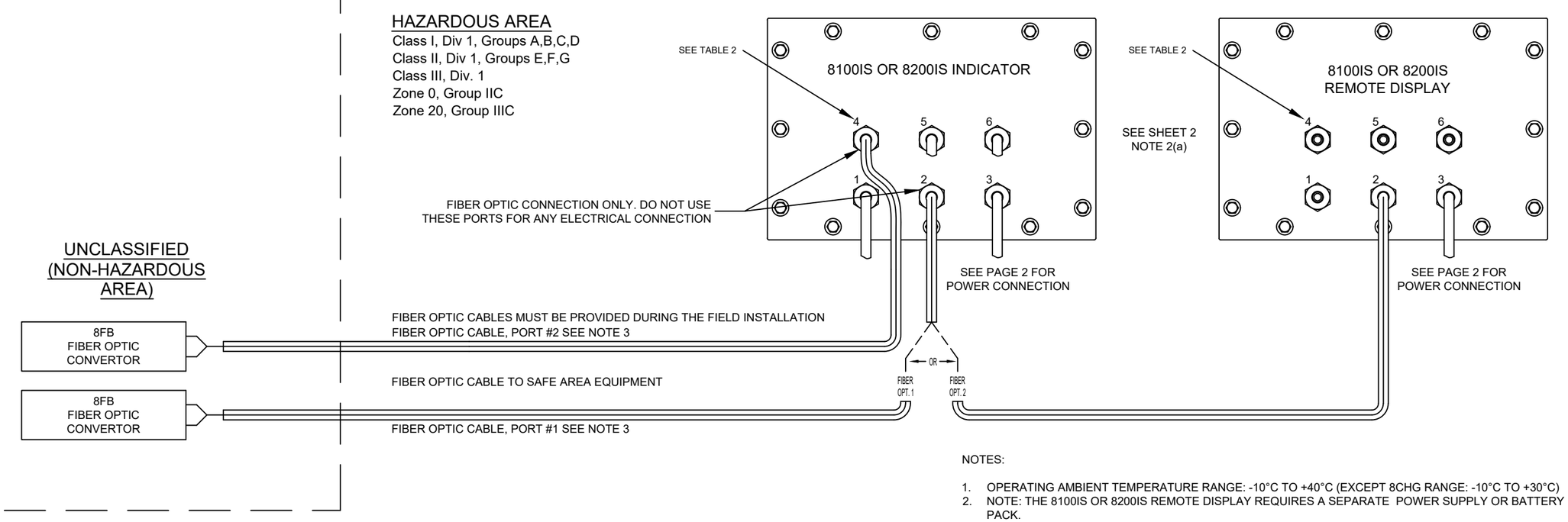

NOTES:

1. OPERATING AMBIENT TEMPERATURE RANGE: -10°C TO +40°C (EXCEPT 8CHG RANGE: -10°C TO +30°C)
2. NOTE: THE 8100IS OR 8200IS REMOTE DISPLAY REQUIRES A SEPARATE POWER SUPPLY OR BATTERY PACK.
3. ANY FIBER OPTIC CABLES SHALL BE INSTALLED IN ACCORDANCE WITH ARTICLES 500.8, 501.10, 501.15, 502.10, 502.15, 503, 505.15, 505.16, 506.9, AND 506.15 OF THE NATIONAL ELECTRICAL CODE (ANSI/NFPA 70) OR OTHER LOCAL CODES, AS APPLICABLE
4. MODEL 8FB WAS EVALUATED AS OPEN EQUIPMENT. OPEN EQUIPMENT IS INTENDED TO BE FIELD INSTALLED WITHIN A SEPARATE OVERALL ENCLOSURE OR END-PRODUCT EQUIPMENT ENCLOSURE.
5. RUN EACH CABLE PAIRS THRU GLAND TO THE DEVICES FIBER OPTIC PORTS. INSERT MARKED CABLE TO RX(IN) PORT AND THE UNMARKED TO TX(OUT) PORT.

8100IS OR 8200IS INDICATOR/REMOTE DISPLAY (INTERNAL VIEW)

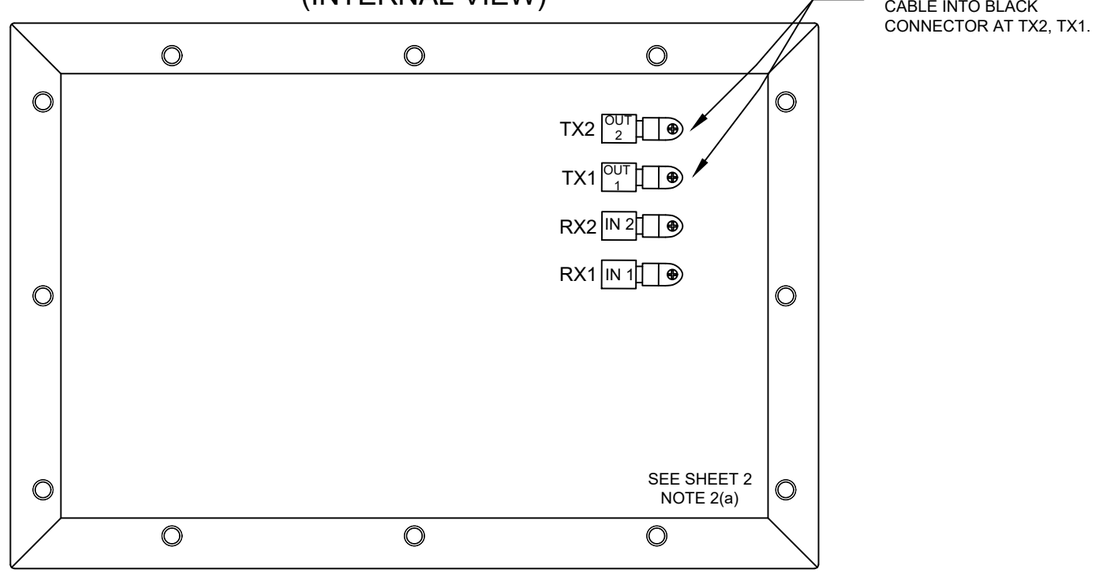

CAUTION: SEE MAN0289 FOR HARDWARE TORQUE RATINGS. DO NOT DAMAGE CIRCUITRY OR ANY WIRES DURING PROCESS

TABLE 2

I/O Port Number	8100IS Indicator	8200IS Indicator	8100IS Remote Display	8200IS Remote Display
1	L	L	(SS)	(SS)
2	F	F	F	F
3	P	P	P	P
4	F	F	(SS)	(SS)
5	RS	RS	(SS)	(SS)
6	RS	RS	(SS)	(SS)

KEY:

L - LOAD CELL OR 8JBX CONNECTION
F - FIBER OPTIC ONLY
P - I.S. POWER INPUT ONLY
RS - REMOTE SWITCH OUTPUT ONLY
(SS) - STAINLESS STEEL PLUG

WARNING

READ AND UNDERSTAND COMPLETELY USER MANUAL NO, MAN0289 FOR THESE DEVICES BEFORE INSTALLATION OR OPERATION

doran® DORAN SCALES, INC.
www.doranscales.com

SYSTEM CONTROL DRAWING

DATE:	DRAWN BY:	DRAWING NUMBER	SHEET NUMBER	REV
06/14/21	J.TORRES	900243	SHEET 3 OF 5	07

ECO #	REV	REVISIONS	DATE	APP
18-037	01	BLOCK CHANGED/ABBREVIATIONS/TABLE MADE	5/7/18	J.T
18-073	02	UL MARKUPS	11/5/18	J.T
19-006	03	MORE UL MARKUPS	01/11/19	J.T
19-008	04	STANDARD CONFIGURATION	01/23/19	J.T
19-011	05	TABLE 2 INTRODUCTION	02/06/19	J.T
19-020	06	FINAL UL MARKUPS	03/01/19	J.T
20-010	07	PCA0368 R9 UPDATE FIBER OPTIC MOVE TO MAIN CIRCUIT BOARD	11/31/20	M.P

REMOTE SWITCH WIRING

HAZARDOUS AREA

Class I, Div 1, Groups A,B,C,D
Class II, Div 1, Groups E,F,G
Class III, Div. 1
Zone 0, Group IIC
Zone 20, Group IIIC

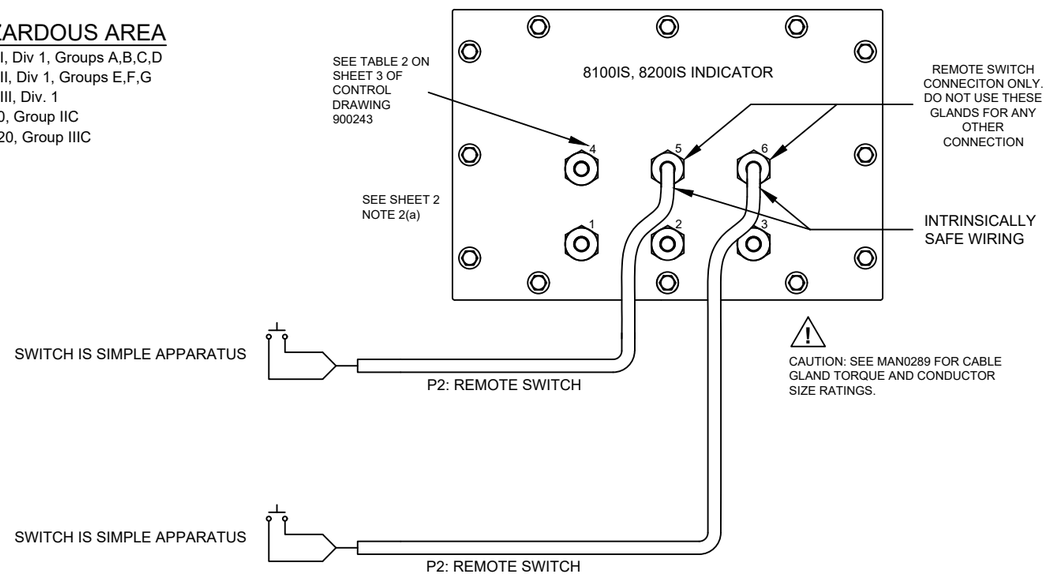

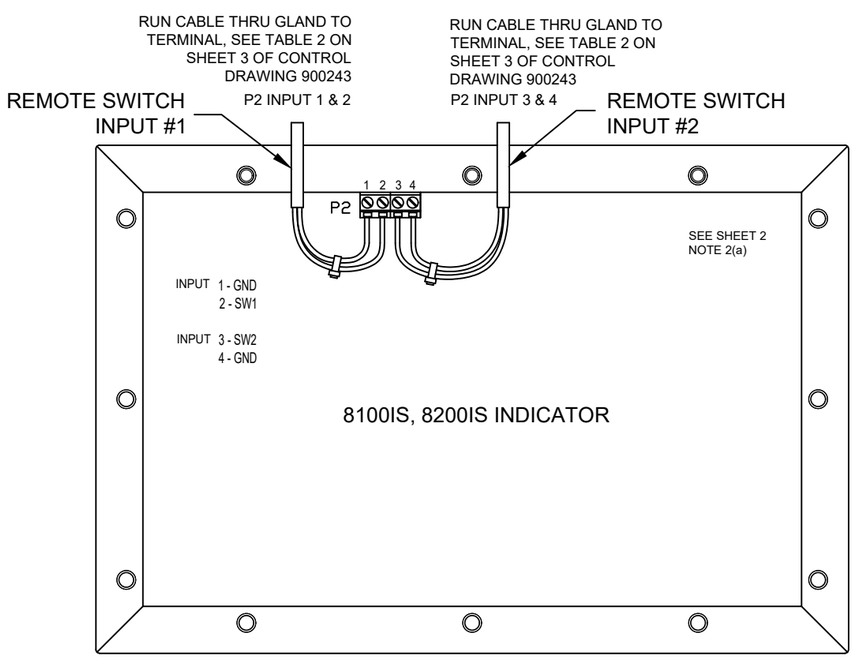

CAUTION: SEE MAN0289 FOR HARDWARE TORQUE RATINGS. DO NOT DAMAGE CIRCUITRY OR ANY WIRES DURING PROCESS

OUTPUT ENTITY PARAMETERS					
DESCRIPTION (LOCATION)	U_o	I_o	P_o	C_o	L_o
REMOTE SWITCH #1 & #2	7.14 V	0.133 A	0.217 W	13.5 uF	2.02 mH

NOTES:

1. THE DORAN I.S. OUTPUT CABLE MUST BE CONNECTED TO A SUITABLE GROUND ELECTRODE PER THE NATIONAL ELECTRICAL CODE (ANSI/NFPA 70), THE CANADIAN ELECTRICAL CODE OR OTHER LOCAL INSTALLATION CODES, AS APPLICABLE. THE RESISTANCE OF THE GROUND PATH MUST BE LESS THAN 1 OHM.
2. OPERATING AMBIENT TEMPERATURE RANGE: -10°C TO +40°C (EXCEPT 8CHG RANGE: -10°C TO +30°C)
3. INTRINSICALLY SAFE WIRING SHALL BE IDENTIFIED AS SUCH WITH LABELS PLACED NO MORE THAN 7.62M (25FT) APART. THE COLOR LIGHT BLUE IS INTERNATIONALLY RECOGNIZED AS IDENTIFYING INTRINSICALLY SAFE WIRING.
4. THE OUTPUT CURRENT OF THESE INTRINSICALLY SAFE DORAN OUTPUTS IS LIMITED BY A RESISTOR SUCH THAT THE OUTPUT VOLTAGE-CURRENT PLOT IS A STRAIGHT LINE DRAWN BETWEEN OPEN-CIRCUIT VOLTAGE AND SHORT-CIRCUIT CURRENT.
5. SELECTED INTRINSICALLY SAFE EQUIPMENT/SWITCHES (FOR USE WITH THESE INTRINSICALLY SAFE DORAN OUTPUTS) MUST BE THIRD PARTY LISTED AS INTRINSICALLY SAFE FOR THE APPLICATION (UNLESS DEEMED SIMPLE APPARATUS PER NOTE 11 ON SHEET 4, AND HAVE INTRINSICALLY SAFE ENTITY PARAMETERS CONFORMING WITH TABLE 1 BELOW.

TABLE 1		
I.S. Equipment/Switches		I.S. Doran Outputs
V max (or Ui)	≥	Voc or Vt (or Uo)
I max (or Ii)	≥	Isc or It (or Io)
P max, Pi	≥	Po
Ci + Ccable	≤	Ca (or Co)
Li + Lcable	≤	La (or Lo)

6. CAPACITANCE AND INDUCTANCE OF THE FIELD WIRING FROM THE INTRINSICALLY SAFE EQUIPMENT/SWITCHES TO THESE INTRINSICALLY SAFE DORAN OUTPUTS SHALL BE CALCULATED AND MUST BE INCLUDED IN THE SYSTEM CALCULATIONS AS SHOWN IN TABLE 1. CABLE CAPACITANCE, Ccable, PLUS INTRINSICALLY SAFE EQUIPMENT CAPACITANCE, Ci MUST BE LESS THAN THE MARKED CAPACITANCE, Ca (OR Co), SHOWN ON ANY I.S. DORAN OUTPUTS USED. THE SAME APPLIES FOR INDUCTANCE (Lcable, Li AND La OR Lo, RESPECTIVELY). WHERE THE CABLE CAPACITANCE AND INDUCTANCE PER FOOT ARE NOT KNOWN, THE FOLLOWING VALUES SHALL BE USED: Ccable = 60 pF/ft., Lcable = 0.2 µH/ft.
7. WHERE MULTIPLE CIRCUITS EXTEND FROM THE SAME PIECE OF ASSOCIATED APPARATUS OR INTRINSICALLY SAFE DEVICE (WHERE ALL PINS ARE NOT STATED AS COMBINED AND/OR DIFFERENT ENTITY PARAMETERS ASSIGNED), THEY MUST BE INSTALLED IN SEPARATE CABLES OR IN ONE CABLE HAVING SUITABLE INSULATION. REFER TO ARTICLE 504.30(B) OF THE NATIONAL ELECTRICAL CODE (ANSI/NFPA 70) AND INSTRUMENT SOCIETY OF AMERICA RECOMMENDED PRACTICE ISA RP12.06 FOR INSTALLING INTRINSICALLY SAFE EQUIPMENT.
8. INTRINSICALLY SAFE CIRCUITS MUST BE WIRED AND SEPARATED IN ACCORDANCE WITH ARTICLE 504.20 OF THE NATIONAL ELECTRICAL CODE (ANSI/NFPA 70) OR OTHER LOCAL CODES, AS APPLICABLE.
9. THESE INTRINSICALLY SAFE DORAN OUTPUTS HAVE NOT BEEN EVALUATED FOR USE IN COMBINATION WITH ANOTHER DEVICE WITH ANY OUTPUTS.
10. FOR INSTALLATIONS IN WHICH BOTH THE Ci AND Li OF THE INTRINSICALLY SAFE APPARATUS/SWITCHES EXCEEDS 1% OF THE Ca (OR Co) AND La (OR Lo) PARAMETERS OF THESE INTRINSICALLY SAFE DORAN OUTPUTS (EXCLUDING THE CABLE), THEN 50% OF Ca (OR Co) AND La (OR Lo) PARAMETERS ARE APPLICABLE AND SHALL NOT BE EXCEEDED. THE REDUCED CAPACITANCE SHALL NOT BE GREATER THAN 1 µF FOR GROUPS C AND/OR D, AND 600 nF FOR GROUPS A AND B. THE VALUES OF Ca (OR Co) AND La (OR Lo) DETERMINED BY THIS METHOD SHALL NOT BE EXCEEDED BY THE SUM OF ALL OF Ci PLUS CABLE CAPACITANCES AND THE SUM OF ALL OF THE Li PLUS CABLE INDUCTANCES IN THE CIRCUIT RESPECTIVELY.
11. THESE INTRINSICALLY SAFE DORAN OUTPUTS MAY ALSO BE CONNECTED TO SIMPLE APPARATUS AS DEFINED IN ARTICLE 504.2 AND INSTALLED AND TEMPERATURE CLASSIFIED IN ACCORDANCE WITH ARTICLE 504.10(D) OF THE NATIONAL ELECTRICAL CODE (ANSI/NFPA 70), OR OTHER LOCAL CODES, AS APPLICABLE.

WARNING

READ AND UNDERSTAND COMPLETELY USER MANUAL NO, MAN0289 FOR THESE DEVICES BEFORE INSTALLATION OR OPERATION

doran®

DORAN SCALES, INC.
www.doranscales.com

SYSTEM CONTROL DRAWING

DATE:	DRAWN BY:	DRAWING NUMBER	SHEET NUMBER	REV
11/31/20	J.TORRES	900243	SHEET 4 OF 5	07

ECO #	REV	REVISIONS	DATE	APP
19-011	05	TABLE 2 INTRODUCTION	02/06/19	J.T
19-020	06	FINAL UL MARKUPS	03/01/19	J.T
20-010	07	PCA0368 R9 UPDATE FIBER OPTIC MOVE TO MAIN CIRCUIT BOARD	11/31/20	M.P

ECO #	REV	REVISIONS	DATE	APP
18-037	01	BLOCK CHANGED/ABBREVIATIONS/NOTES	5/7/18	J.T
18-073	02	UL MARKUPS	11/5/18	J.T
19-006	03	MORE UL MARKUPS	01/11/19	J.T
19-008	04	STANDARD CONFIGURATION	01/23/19	J.T

NOTES FOR PAGE 1 OF CONTROL DRAWING No. 900243

NOTES:

1. SEE PAGE 1
2. SEE PAGE 1
3. SEE PAGE 1
4. CONNECT THE LOADCELL CABLE SHIELD WIRE TO THE THREADED STUD ADJACENT TO SEALING GLAND. TO ASSURE PROPER GROUNDING, TEST FOR CONTINUITY BETWEEN PLATFORM(LOAD CELL) AND SHIELD. THE PLATFORM SHOULD BE PROPERLY GROUNDED TO EARTH.
5. THE DORAN I.S. OUTPUT CABLE MUST BE CONNECTED TO A SUITABLE GROUND ELECTRODE PER THE NATIONAL ELECTRICAL CODE (ANSI/NFPA 70), THE CANADIAN ELECTRICAL CODE OR OTHER LOCAL INSTALLATION CODES, AS APPLICABLE. THE RESISTANCE OF THE GROUND PATH MUST BE LESS THAN 1 OHM.
6. OPERATING AMBIENT TEMPERATURE RANGE: -10°C TO +40°C
7. LOADCELL CABLE LENGTH: 75 FEET MAX FOR THE 4-WIRE LOADCELLS, AND 50 FEET MAX FOR THE 6-WIRE LOADCELLS. THESE MUST INCLUDE TOTAL LENGTH OF CABLE STARTING AT INDICATOR AND ENDING AT EACH LOADCELL (ALL COMBINED).
8. 8JBX JUNCTION BOX IS TYPE 1, IP20 FOR DRY INDOOR LOCATIONS.
9. THE OUTPUT CURRENT OF THESE INTRINSICALLY SAFE DORAN OUTPUTS IS LIMITED BY A RESISTOR SUCH THAT THE OUTPUT VOLTAGE-CURRENT PLOT IS A STRAIGHT LINE DRAWN BETWEEN OPEN-CIRCUIT VOLTAGE AND SHORT-CIRCUIT CURRENT.
10. SELECTED INTRINSICALLY SAFE EQUIPMENT/LOADCELLS (FOR USE WITH THESE INTRINSICALLY SAFE DORAN OUTPUTS) MUST BE THIRD PARTY LISTED AS INTRINSICALLY SAFE FOR THE APPLICATION (UNLESS DEEMED SIMPLE APPARATUS PER NOTE 1 ON SHEET 1), AND HAVE INTRINSICALLY SAFE ENTITY PARAMETERS CONFORMING WITH TABLE 1 ON SHEET 1.
11. CAPACITANCE AND INDUCTANCE OF THE FIELD WIRING FROM THE INTRINSICALLY SAFE EQUIPMENT/LOADCELLS TO THESE INTRINSICALLY SAFE DORAN OUTPUTS SHALL BE CALCULATED AND MUST BE INCLUDED IN THE SYSTEM CALCULATIONS AS SHOWN IN TABLE 1 ON SHEET 1. CABLE CAPACITANCE, Ccable, PLUS INTRINSICALLY SAFE EQUIPMENT CAPACITANCE, Ci MUST BE LESS THAN MARKED CAPACITANCE, Ca (OR Co), SHOWN ON ANY I.S. DORAN OUTPUTS USED. THE SAME APPLIES FOR INDUCTANCE (Lcable, Li AND La OR Lo, RESPECTIVELY). WHERE THE CABLE CAPACITANCE AND INDUCTANCE PER FOOT ARE NOT KNOWN, THE FOLLOWING VALUES SHALL BE USED: Ccable = 60 pF/ft., Lcable = 0.2 µH/ft.
12. WHERE MULTIPLE CIRCUITS EXTEND FROM THE SAME PIECE OF ASSOCIATED APPARATUS OR INTRINSICALLY SAFE DEVICE (WHERE ALL PINS ARE NOT STATED AS COMBINED AND/OR DIFFERENT ENTITY PARAMETERS ASSIGNED), THEY MUST BE INSTALLED IN SEPARATE CABLES OR IN ONE CABLE HAVING SUITABLE INSULATION. REFER TO ARTICLE 504.30(B) OF THE NATIONAL ELECTRICAL CODE (ANSI/NFPA 70) AND INSTRUMENT SOCIETY OF AMERICA RECOMMENDED PRACTICE ISA RP12.06 FOR INSTALLING INTRINSICALLY SAFE EQUIPMENT.
13. INTRINSICALLY SAFE CIRCUITS MUST BE WIRED AND SEPARATED IN ACCORDANCE WITH ARTICLE 504.20 OF THE NATIONAL ELECTRICAL CODE (ANSI/NFPA 70) OR OTHER LOCAL CODES, AS APPLICABLE.
14. THESE INTRINSICALLY SAFE DORAN OUTPUTS HAVE NOT BEEN EVALUATED FOR USE IN COMBINATION WITH ANOTHER DEVICE WITH ANY OUTPUTS.
15. FOR INSTALLATIONS IN WHICH BOTH THE Ci AND Li OF THE INTRINSICALLY SAFE APPARATUS/LOADCELLS EXCEEDS 1% OF THE Ca (OR Co) AND La (OR Lo) PARAMETERS OF THESE INTRINSICALLY SAFE DORAN OUTPUTS (EXCLUDING THE CABLE), THEN 50% OF Ca (OR Co) AND La (OR Lo) PARAMETERS ARE APPLICABLE AND SHALL NOT BE EXCEEDED. THE REDUCED CAPACITANCE SHALL NOT BE GREATER THAN 1 µF FOR GROUPS C AND/OR D, AND 600 nF FOR GROUPS A AND B. THE VALUES OF Ca (OR Co) AND La (OR Lo) DETERMINED BY THIS METHOD SHALL NOT BE EXCEEDED BY THE SUM OF ALL OF Ci PLUS CABLE CAPACITANCES AND THE SUM OF ALL OF THE Li PLUS CABLE INDUCTANCES IN THE CIRCUIT RESPECTIVELY.
16. 8JBX LOAD CELL I.S. WIRING BELOW
17. 8JBX OUTPUT ENTITY PARAMETERS BELOW

6-WIRE LOADCELL CONNECTION

8JBX BOARD INSIDE BOX

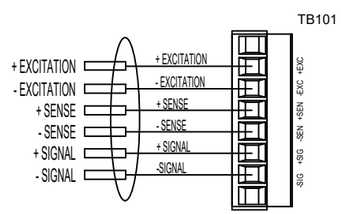

4-WIRE LOADCELL CONNECTION

8JBX BOARD INSIDE BOX

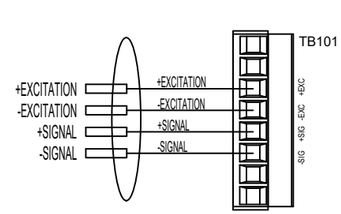

OUTPUT ENTITY PARAMETERS					
DESCRIPTION (LOCATION)	U_O	I_o	P_o	C_o	L_o
LOADCELL (TB102-TB105)	7.14 V	0.7076 A	0.895 W	10.8 uF*	71 uH**

*Co (subtract) C_loadcell_cable_from_indicator
**Lo (subtract) L_loadcell_cable_from_indicator

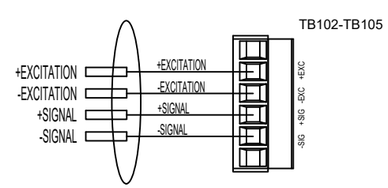

NOTES FOR PAGE 2 OF CONTROL DRAWING No. 900243

NOTES:

8. NOTES 1-8 SEE PAGE 2
9. THE ELECTRONICS LOCATED IN THE BARRIER CIRCUIT OF MODEL 8AIS FORMS AN INTRINSICALLY SAFE SYSTEM WHEN ONE INDICATOR/REMOTE DISPLAY MODEL 8100IS/8200IS IS CONNECTED TO ITS INTRINSICALLY SAFE OUTPUT CABLE AS SHOWN ON SHEET 2, AND THE INDICATOR/REMOTE DISPLAY MODELS 8100IS/8200IS ARE SUITABLE FOR USE IN HAZARDOUS AREAS AS SHOWN ON THIS CONTROL DRAWING NO. 900243. NO OTHER DEVICES ARE SUITABLE FOR DIRECT CONNECTION TO THE INTRINSICALLY SAFE OUTPUT CABLE OF MODEL 8AIS, AND THE ONLY ADDITIONAL DEVICES/CONFIGURATIONS THAT MAY BE CONNECTED TO THE INDICATOR/REMOTE DISPLAY MODELS 8100IS/8200IS ARE SHOWN ON THIS CONTROL DRAWING NO. 900243
10. THE OUTPUT CURRENT OF THE MODEL 8AIS ASSOCIATED APPARATUS IS LIMITED BY A RESISTOR SUCH THAT THE OUTPUT-VOLTAGE PLOT IS A STRAIGHT LINE DRAWN BETWEEN OPEN-CIRCUIT VOLTAGE AND SHORT-CIRCUIT CURRENT.
11. ASSOCIATED APPARATUS MODEL 8AIS MUST BE INSTALLED IN AN ENCLOSURE SUITABLE FOR THE APPLICATION IN ACCORDANCE WITH THE NATIONAL ELECTRICAL CODE (ANSI/NFPA 70) FOR INSTALLATION IN THE UNITED STATES, THE CANADIAN ELECTRICAL CODE FOR INSTALLATIONS IN CANADA, OR OTHER LOCAL CODES, AS APPLICABLE.
12. THE ASSOCIATED APPARATUS MODEL 8AIS MUST BE CONNECTED TO A SUITABLE GROUND ELECTRODE PER THE NATIONAL ELECTRICAL CODE (ANSI/NFPA 70), THE CANADIAN ELECTRICAL CODE OR OTHER LOCAL INSTALLATION CODES, AS APPLICABLE. THE RESISTANCE OF THE GROUND PATH MUST BE LESS THAN 1 OHM.
13. INTRINSICALLY SAFE CIRCUITS MUST BE WIRED AND SEPARATED IN ACCORDANCE WITH ARTICLE 504.20 OF THE NATIONAL ELECTRICAL CODE (ANSI/NFPA 70) OR OTHER LOCAL CODES, AS APPLICABLE.
14. THIS ASSOCIATED APPARATUS MODEL 8AIS HAS NOT BEEN EVALUATED FOR USE IN COMBINATION WITH ANOTHER ASSOCIATED APPARATUS.
15. THE ELECTRONICS LOCATED IN THE MODEL 8BIS BATTERY PACK FORMS AN INTRINSICALLY SAFE SYSTEM WHEN ONE INDICATOR/REMOTE DISPLAY MODELS 8100IS/8200IS IS CONNECTED TO ITS INTRINSICALLY SAFE OUTPUT CABLE AS SHOWN ABOVE, AND THE INDICATOR/REMOTE DISPLAY MODELS 8100IS/8200IS ARE SUITABLE FOR USE IN HAZARDOUS AREAS AS SHOWN ON THIS CONTROL DRAWING NO. 900243. NO OTHER DEVICES ARE SUITABLE FOR DIRECT CONNECTION TO THE INTRINSICALLY SAFE OUTPUT CABLE OF MODEL 8BIS, AND THE ONLY ADDITIONAL DEVICES/CONFIGURATIONS THAT MAY BE CONNECTED TO THE INDICATOR/REMOTE DISPLAY MODELS 8100IS/8200IS ARE SHOWN ON THIS CONTROL DRAWING NO. 900243.
16. THE OUTPUT CURRENT OF THE MODEL 8BIS IS LIMITED BY A RESISTOR SUCH THAT THE OUTPUT VOLTAGE-CURRENT PLOT IS A STRAIGHT LINE DRAWN BETWEEN OPEN-CIRCUIT VOLTAGE AND SHORT-CIRCUIT CURRENT.
17. MODEL 8JBX MUST BE INSTALLED IN AN ENCLOSURE SUITABLE FOR THE APPLICATION IN ACCORDANCE WITH THE NATIONAL ELECTRICAL CODE (ANSI/NFPA 70) FOR INSTALLATION IN THE UNITED STATES, THE CANADIAN ELECTRICAL CODE FOR INSTALLATIONS IN CANADA, OR OTHER LOCAL CODES, AS APPLICABLE.
18. INTRINSICALLY SAFE CIRCUITS MUST BE WIRED AND SEPARATED IN ACCORDANCE WITH ARTICLE 504.20 OF THE NATIONAL ELECTRICAL CODE (ANSI/NFPA 70) OR OTHER LOCAL CODES, AS APPLICABLE.
19. THIS BATTERY PACK MODEL 8BIS HAS NOT BEEN EVALUATED FOR USE IN COMBINATION WITH ANOTHER POWER SOURCE OR ASSOCIATED APPARATUS.
20. THE INDICATOR/REMOTE DISPLAY MODEL 8100IS/8200IS IS PROVIDED WITH A PERMANENTLY CONNECTED CABLE HAVING THE FOLLOWING CHARACTERISTICS:
    TURCK PART NO. RSM 30-2M UL/C-UL LISTED (E141522)
    RATED 300 V, 9 A, 105C
    3 WIRES, 18 AWG
    IP67 INGRESS PROTECTION
    MAXIMUM CAPACITANCE PER FOOT: 23.6 pF/ft
    MAXIMUM INDUCTANCE PER FOOT: 41.985 uH/ft
    MINIMUM CABLE JACKET INSULATION: 1.806 mm
21. THE MODEL 8BIS IS PROVIDED WITH A PERMANENTLY CONNECTED CABLE HAVING THE FOLLOWING CHARACTERISTICS:
    TURCK PART NO. RKM 30-2M UL/C-UL LISTED (E141522)
    RATED 300 V, 9 A, 105C
    3 WIRES, 18 AWG
    IP67 INGRESS PROTECTION
    MAXIMUM CAPACITANCE PER FOOT: 23.6 pF/ft
    MAXIMUM INDUCTANCE PER FOOT: 41.985 uH/ft
    MINIMUM CABLE JACKET INSULATION: 1.806 mm
22. THE MODEL 8AIS IS PROVIDED WITH A PERMANENTLY CONNECTED CABLE HAVING THE FOLLOWING CHARACTERISTICS:
    TURCK PART NO. RKM 30-2M UL/C-UL LISTED (E141522)
    RATED 300 V, 9 A, 105C
    3 WIRES, 18 AWG
    IP67 INGRESS PROTECTION
    MAXIMUM CAPACITANCE PER FOOT: 23.6 pF/ft
    MAXIMUM INDUCTANCE PER FOOT: 41.985 uH/ft
    MINIMUM CABLE JACKET INSULATION: 1.806 mm
23. SUITABILITY FOR INSTALLATION IN PARTICULAR APPLICATIONS IS AT THE DISCRETION OF THE AUTHORITY HAVING JURISDICTION (AHJ).
24. THE OPTIONAL POWER EXTENSION CABLES WCB0234 AND WCB0235 MAY ONLY BE THE FOLLOWING TYPES IF USED:
    TURCK PART NO. P-RSM RKM 30-026-3M OR P-RSM RKM 30-026-6M
    UL/C-UL LISTED (E141522)
    RATED 300 V, 9 A, 105C
    3 WIRES, 18 AWG; AND 1 FOIL SHIELD, 20 AWG
    IP67 INGRESS PROTECTION
    MAXIMUM CAPACITANCE PER FOOT: 76.8 pF/ft
    MAXIMUM INDUCTANCE PER FOOT: 41.985 uH/ft
    MINIMUM CABLE JACKET INSULATION: 1.806 mm
25. SUITABILITY FOR INSTALLATION IN PARTICULAR APPLICATIONS IS AT THE DISCRETION OF THE AUTHORITY HAVING JURISDICTION (AHJ).

WARNING

READ AND UNDERSTAND COMPLETELY USER MANUAL NO, MAN0289 FOR THESE DEVICES BEFORE INSTALLATION OR OPERATION

doran®

DORAN SCALES, INC.
www.doranscales.com

SYSTEM CONTROL DRAWING

DATE:	DRAWN BY:	DRAWING NUMBER	SHEET NUMBER	REV
11/31/20	J.TORRES	900243	SHEET 5 OF 5	07

Remote Display Option

A second indicator can be connected through a fiber optic cable to the primary indicator. Each indicator must be connected to their own power source, either an 8AIS Power Supply or 8BIS Battery Pack. The communication is through the connector at TX/RX Channel 1 only. Fiber optic cabling will be included separately and must be installed per the Hazardous Area Fiber Optic Option instructions and control drawings.

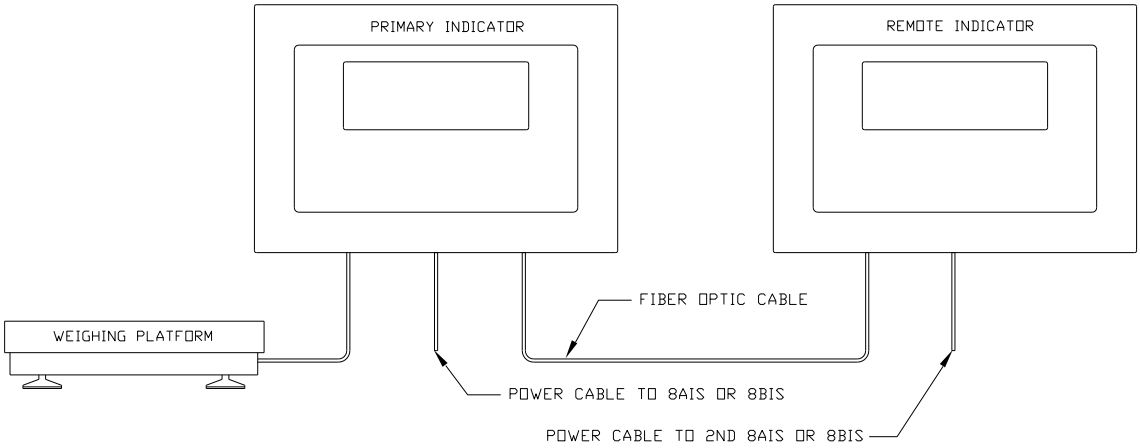

Fig. 11: Remote Display Option

Configuration on Main Indicator

1. Set 3.2 to RD

Configuration on Remote Indicator

1. Set 1.12 to RI (no button functionality on remote indicator) or RIb (UNITS, ZERO, TARE, and GROSS NET buttons active on remote indicator)

Fiber Optic Connection

Connect the fiber optic cables between both indicators with the cable ends reversed on the Remote Indicator. TX/RX Port 1 must be used on both indicators for the remote indicator communications. TX/RX Port 2 still has full functionality on either indicator to run the fiber optic to RS-232 option.

Troubleshooting

If any problem persists, contact Doran Tech Support at tech@doranscales.com

Problem	What to Do or Check
Weight reading will not repeat or does not return to zero when weight is removed	Examine the weighing platform for any interferences. Be sure that nothing is inside the platform, under the load cell or the weigh bridge structure
Scale overloads before reaching full capacity	Make sure all four corner overload stops are properly set, if present. Take the platter off the scale, invert it and place it on the platform. With 1/2 of the scale's capacity in test weights concentrated over a corner of the platform, there should be approximately 1/32" of clearance between the stop and the bottom of the spider. Check all four corners then recalibrate the scale.
Scale will not indicate full capacity or go into overload	Make sure that there is nothing caught in the scale under or around the load cell or spider, which would interfere with their movement. If not, check the overload stops using the above procedure.
Scale will not zero when the ZERO button is pressed	Make sure that the scale is stable (◣◢ annunciator is off) when ZERO is pressed. If excessive motion is a problem, then it may be necessary to activate the Zero on Demand or change the Display Filter parameter.
Weight readings don't seem to be correct	Check the scale's accuracy with a test weight. Recalibrate if necessary.
Scale drifts off of zero	Check for air currents and/or vibration around the scale. If that is the cause, it may be necessary to set the AZT parameter to a wider setting to compensate
Scale reading is bouncing	Check for air currents and/or vibration around the scale. If that is the cause, it may be necessary to change the Display Filter parameter.

Scale Messages

Message	Meaning
REL PB	ZERO pressed and held past needed period
PASS ON	Password enabled
ABORT	Invalid value entry or screen timeout
CLRTAR	0 Tare value has been entered / Tare has been cleared
ER MOT	Calibration error: motion detected
OVR LD	The scale reading an overload condition
UDR LD	The scale is reading an underload condition
LDNG 0	Loading Zero - the scale is filling the average buffer value and does not yet have a valid weight reading
DONE	Calibration completed
SAVED	Exiting CAL mode or other data entry modes
TARE	Prompt for Tare display and entry
CLR AC	Clear Accumulator – displayed when the accumulator and counter are cleared
ENT CD	Prompt for code entry to get into CAL mode
ERROR	Improper value entered or improper action requested
PRD ID	Prompt for Product ID selection
NEW	New Product ID saved from the front panel
CLR ID	Product ID deleted from the front panel
PF 1 – PF 9	Prompt for entry of Product Fields 1 – 9
SETPT	Setpoint display and entry
PREACT	Preact display and entry

Default to Factory Settings

To return the setup parameters to factory default, follow these steps.

1. Enter Calibration

   Front Panel Access

   1. Press and hold ZERO and UNITS simultaneously until the audit counters are displayed.
   2. ENT CD is displayed
   3. Press ZERO 5 times, so that 5 is displayed,
   4. Press UNITS

   Internal Calibration Button

   The calibration push button is located near the center of the board and labeled CAL. Press this button to enter calibration and setup.

2. Press ZERO to enter the 2 CNFG parameter group
3. Press UNITS to scroll to menu item DEFT N.
4. Press ZERO to change selection to DEFT Y.
5. Press UNITS to advance. The display will return to DEFT N.
6. Press ZERO to change selection to DEFT Y.
7. Press UNITS to advance.
8. The scale will then show SAVED.
9. After the SAVED message is displayed, the scale then performs its normal power up routine and enters the Calibration mode. At this time, all the parameters will have been reset to their factory default settings.

Scale Default Settings

When reset to default settings, the CAL menu items, setpoints/outputs, and product IDs are reset. The scale will maintain the calibration settings previously used.

A reference for each CAL menu default value can be found the Scale Parameter Menu Setup, listed in bold.

Doran Scales, Inc.
883 Enterprise Court
St. Charles, IL 60174

www.doranscales.com