DS9100-ADA

ADA Certified Wheelchair Scale

Technical Manual

MAN0374 – Rev 0 Doran Scales, Inc. www.doranscales.com

Section 1. Unpacking and Care 1
Unpacking 1
Cautions and Warnings 1
Care & Cleaning 1
Preventive Maintenance 1
Moving Scale 2
Adjusting Ramp Extension Angle 3
Leveling Scale 4
Section 2. Battery Operation 5
Section 3. Scale Operation 6
Display Pushbuttons 6
Display Annunciators 7
Weighing a Patient without Tare 9
Weighing a Patient with Tare 9
Zero Operation 10
BMI Operation 10
Reweigh Operation 10
Section 4. Scale Calibration 11
Entering and Exiting Setup Mode 11
Two Point Calibration Procedure 11
Multiple Point Calibration Procedure 12
Calibration Troubleshooting 13
Section 5. Parameter Setup 14
Entering and Exiting Setup Mode 14
Calibration Mode Entry 14
Reset All Parameters to Default Settings 15
Automatic Shutoff Timer 15
Average Aperture 16
Data Output 16
EMR Format 16
Configure Output 16
LB Units Enable / Disable 17
KG Units Enable / Disable 17
Inches Units Enable / Disable 17
Centimeters Units Enable / Disable 17
Button Press Beep 18
Stable or Average Hold Weight Beep 18
Battery Voltage Level 18
Raw Counts 18
Section 6. Data Communications 19
RS-232 Communications Port 19
USB Communications Port 19
Section 7. Specifications 23
Section 8. Troubleshooting 24
General Problem Resolution 24

Section 1. Unpacking and Care

Thank you for purchasing a Doran scale. This product has been designed with the highest level of technology. We are dedicated to delivering a superior product that will provide many years of trouble free service.

As an ISO9001 registered company, Doran Scales is dedicated to delivering products built with strict compliance to our high quality standards. If you have any questions regarding your scale, please contact Doran Scales, Inc.

Unpacking

Carefully remove the scale from the shipping carton. If you notice any shipping damage, notify the shipper immediately. Be sure to retain all shipping materials in case the scale must be shipped elsewhere.

Cautions and Warnings

Normal care should be taken when handling and using this product. Improper handling or abuse can damage the scale and result in costly repairs that may not be covered by the warranty. Please observe the following precautions to ensure years of trouble free service from your new scale.

- Do not use sharp objects to press any of the buttons.
- Do not pick up the scale by the indicator or cables.
- Do not use the scale if it is damaged in any way.
- Do not leave patients unattended on the scale.
- Do not exceed the scale capacity.
- Do not drop the scale.
- Do not drop objects on the scale.
- When transporting, do not hit other objects, walls or doorframes with the scale.

Care & Cleaning

With reasonable care, this product will last for many years. Here are some tips to care for your scale. Failure to comply with these guidelines may void the warranty.

- This scale will withstand typical cleaning methods and chemicals that are used in healthcare environments. This includes but not limited to cleaners that contain sodium hypochlorite (bleach), hydrogen peroxide and alcohol.
- Do not get water inside the indicator or platform.
- Do not immerse in water or any liquid.
- Do not use strong solvents or abrasive cleaners as this can damage the touch panel or other plastic parts.

Preventive Maintenance

- Examine the scale periodically for damage and wear and tear before use.
- If the scale is damaged, check calibration of the scale and safety before use.
- Check calibration annually and calibrate if necessary.
- Remove batteries during long periods of non-use.

Moving Scale

To move the scale the tower must be folded and locked into place.

1. Fold the ramp(s) onto the scale platform.
2. Release both latches on each side of the tower.
3. Pull the tower release handle at the rear of the scale to release the tower.
4. Push the tower downwards towards the platform until you hear a click.
5. Once the tower is locked into place the scale can be tilted onto the four wheels at the rear of the platform. See Figure 1.

Once the scale is relocated, and is ready for use,

1. Place the scale platform onto the floor. See Figure 2.
2. Pull the release lever in the direction of the arrow to release the tower.
3. Pull the tower upwards. A hydraulic system will assist raising the tower.
4. When the tower locks in place, pull it towards the base to ensure it has locked into place.
5. Engage the two latches at the rear of the tower.
6. If required, unfold the ramp(s) for use.
7. Press Zero.

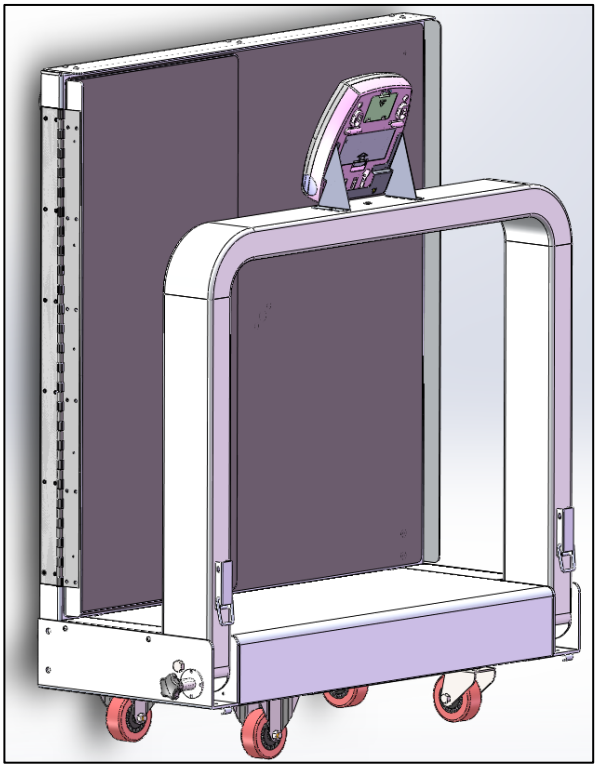

Fig. 1 Scale Ready for Transportation

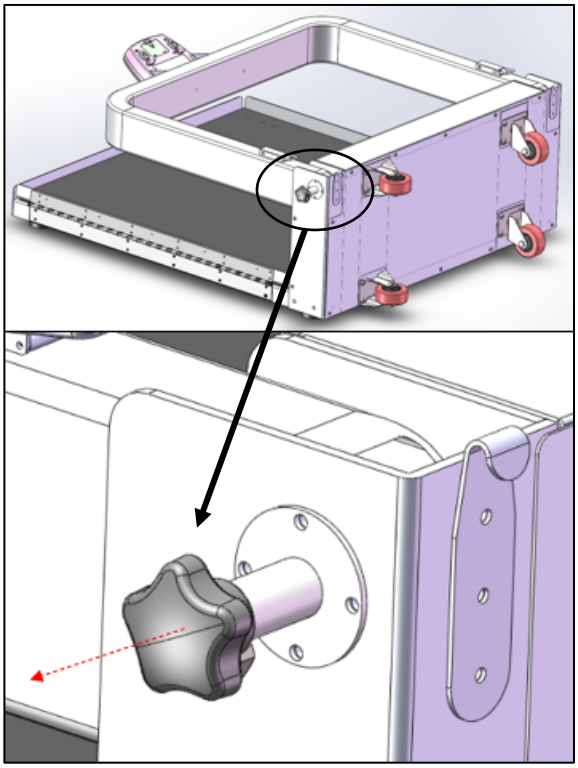

Fig. 2 Release Lever

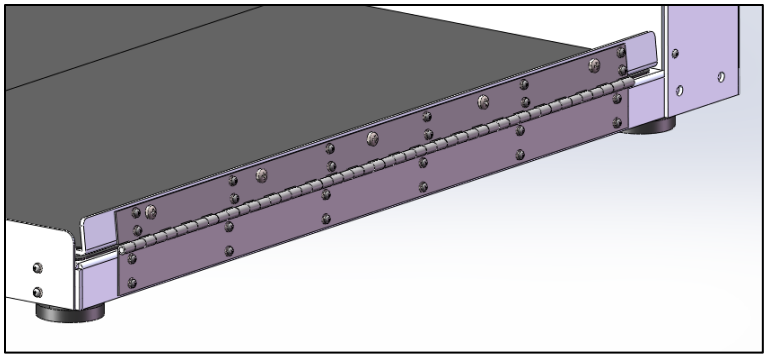

Fig. 3 Ramp Screw Configuration

Adjusting Ramp Extension Angle

The ramp is designed to not touch the floor when weight is not applied to the ramp. This feature increases scale accuracy and repeatability. If required, the angle of the ramp when extended can be changed.

1. Extend the ramp from the platform.
2. If the ramp is contacting the ground, an adjustment is required.
3. Fold the ramp onto the platform.
4. Five large screws control the angle of the ramp when extended.
5. Adjust the screws outward to raise the ramp or adjust inward to lower the ramp when extended.
6. Extend the ramp and confirm the ramp is no longer touching the ground. Up to a 1/8” gap is acceptable.

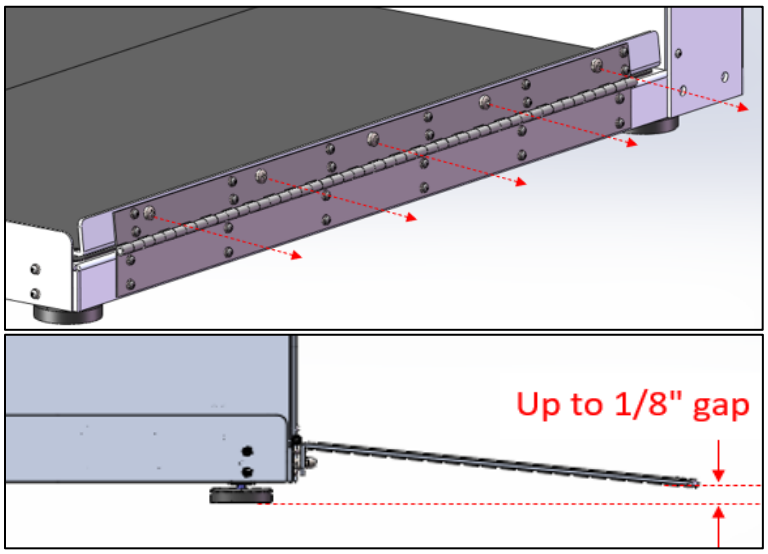

Leveling Scale

If the scale is to be used in a permanent location, it is recommended to level the scale. Leveling the scale will provide a stable weighing surface and optimal accuracy. To level the platform, use the end of the flat wrench marked with an 'F' provided with the scale. Insert the wrench into place and twist the foot to change the height while grasping the wrench.

After leveling the scale, press Zero.

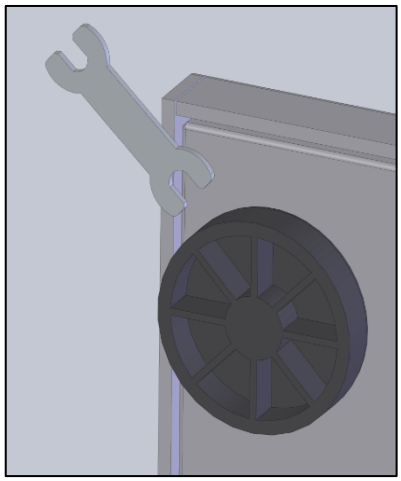

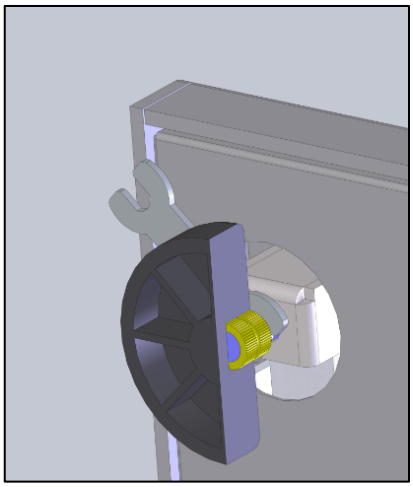

Section 2. Battery Operation

Battery Installation

The indicator can be powered by a set of six AA alkaline batteries. These batteries supply two years of typical use with the standard Automatic Shutoff Timer settings.

The battery compartment is located on the backside of the indicator. Press locking tab up to release battery compartment cover. Completely remove all the batteries from the indicator and install the new set of batteries. Be sure the batteries are oriented properly. Reinstall battery compartment cover to complete the battery installation.

Battery Indicator

The battery indicator displays the remaining battery life available. A low battery status is also indicated by two beeps when a weight is held (If Parameter bH is set to on. This indicator will not be displayed if the scale is powered by its wall transformer instead of batteries.

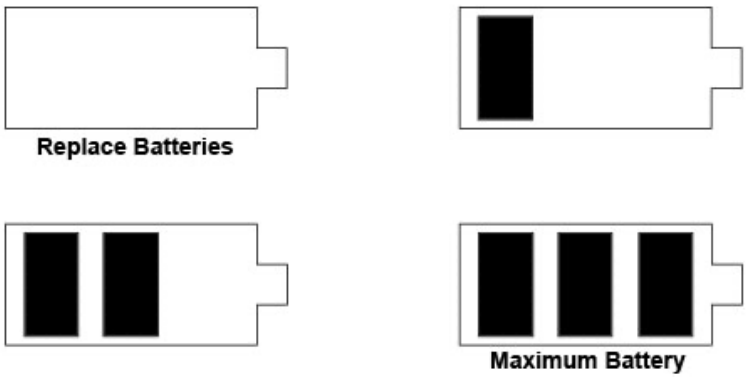

Section 3. Scale Operation



Fig. 3 Front Panel

Display Pushbuttons

The Model DS9100-ADA controls consist of UNITS, ZERO, REWEIGH, ▲, ▼, and TARE buttons. The display is used to provide weight indications and operator messages indicating scale operation.

Power On/Off

Press the ZERO button to turn on the indicator. Press and hold the ZERO button for 3 seconds to turn off the indicator. The indicator has an adjustable Automatic Shutoff Timer that will turn off the indicator when not in use.

Zero

When the ZERO button is pressed, the scale will be reset to zero weight. This feature can be used to zero out any weight not desired to be part of the patient weight. Current BMI entry will be changed back to a default 0.0 value.

Units

Press the UNITS button to toggle between lb and kg weighing units. The current unit will be displayed to the right of the weight digits. *NOTE: The UNITS button can be locked or unlocked by pressing and holding Units for 5 seconds. An "L on" message is displayed when button is locked and "L oFF" when unlocked.*

Reweigh

To reinitiate the weighing process, press REWEIGH. This will allow a new measurement to be taken without the patient having to leave the platform.

Tare

To enter a tare weight for a wheelchair, press the TARE button. A "tArE" message is momentarily displayed, then 15.0 lb. Adjust the weight value by using the ▲ or ▼ buttons. Press the TARE button to save the value and exit the tare entry mode. If a weight value has been entered, the scale will display NET weight. *To clear current tare weight, press the ZERO button. A menu timer will exit out of this entry mode if no buttons are pressed within a 30 second time period.*

BMI

With the hold weight being displayed, press and hold the TARE button for 1.5 seconds to enter the height of the patient. Adjust the value by using the ▲ or ▼ buttons. *NOTE: Select the Height units by pressing the UNITS button to toggle between the height in inches or centimeters. A menu timer will exit out of this mode if no buttons are pressed within a 30 second time period.*

Display Annunciators

The display annunciators will indicate the scale status.

NET

Net mode is indicated by the NET annunciator. When on, the scale is displaying a net weight. When off, the scale is displaying a gross weight.

Motion

When the scale senses motion, MOTION will be indicated. Once motion ceases, a stable reading will be displayed.

Stable Hold

Indicates a stable weight has been achieved and held on the display. This indicates an accurate weight has been achieved. *Note: Weights below 30 pounds will not be held.*

Average Hold

Indicates that the weight held on the display is a result of averaging several weights due to excessive motion on the scale. *Note: Weights below 30 pounds will not be held. The Average Hold weight may be slightly less accurate than a Stable Hold weight.*

Displaying an Average Hold weight instead of a Stable Hold weight will speed the weighment process of patients that cannot stand still. The Average Hold weight will differ from the patient's actual weight based upon the severity of the motion caused by the patient while on the scale. Although this weight may be less accurate than a Stable Hold weight, the deviation from the patient's actual weight will be minimal.

The time required for the Average Hold to engage is based upon the Average Aperture parameter. See the Parameter Setup section for configuration instructions.

Battery Indicator
The battery indicator displays the remaining battery life available. See the battery operation section for detailed information. *NOTE: Battery Indicator will be disabled when using an external power supply.*

Software Number and Revision display
Pressing and holding the Reweigh button for 3 seconds will perform a display test, show the Software number "Su 181" and the revision "r 3.1" or higher and then display "StESt" to indicate Switch test mode is active. The Switch test mode stops after 10 seconds if no switch was pressed. Scale will then run a Display Segment test. After Display Segment test, the scale will return to the normal weighing operation.

Weighing a Patient without Tare

- Turn on the indicator by pressing the ZERO button.
- The indicator will perform a startup zero.
- The indicator will display scrolling dashes "-----". Then display 0.00 weight.
- Place the patient on the scale platform.
- The display will scroll dashes for about 3 seconds until the patient's weight is captured.
- The indicator will beep (when enabled) and then hold the weight on the display until the scale shuts off.

Weighing a Patient with Tare

Example 1:

- Turn on scale.
- Scale zeroes.
- Press TARE.
- 15.0lb is displayed.
- Use the ▲ and ▼ arrows to set the tare value.
- Press TARE to apply the tare value and return to the weight display.
- Display now shows a negative value and the NET indicator is displayed.

Example 2:

- Turn on scale.
- Scale zeroes.
- Place patient and wheelchair on the scale.
- Display holds the weight.
- Press TARE.
- 15.0lb is displayed.
- Use the ▲ and ▼ buttons to set the tare value.
- Press TARE to apply the tare value and return to the held weight.
- The displayed weight now shows the NET patient weight. The tare value has been applied to the held weight. *Note that the scale operator does not need to press REWEIGH for the tare to be applied to the held weight.*

Once a TARE value has been applied it will remain in effect until changed or until the scale shuts off.

Zero Operation

1. Place item to be zeroed on the scale platform.
2. Press ZERO. The scale will display a zero weight. If the item is removed, the stable negative weight will be shown.
3. The patient and the item are then place on the scale platform. The patient's weight, less the item's weight, will be displayed.
4. To reset the scale weight to zero, Press Zero again with the scale platform empty.

NOTE: Stable weights between -5 lb and +5 lb will be zeroed out after 3 seconds.

BMI Operation

1. With a hold weight displayed, press and hold the TARE button for 1.5 seconds to enter the height value. Height entry starts at 5: 6.0 or 168.0, representing 5 foot 6 inches or 168 centimeters. *NOTE: Height units can be changed by pressing the Units button.*

2. Press the ▲ button to increase or the ▼ button to decrease the value. When the correct value is displayed, press the BMI button to enter value and exit. *NOTE: A menu timer will exit out of this entry mode if no buttons are pressed within a 30 second time period.*

Reweigh Operation

1. With the patient standing on the scale platform, press Reweigh to reinitiate the weighing process.
2. The display will scroll dashes for about 3-5 seconds until the patient's weight is captured.
3. The indicator will beep (when enabled) and hold the weight on the display until the scale shuts off automatically.

Section 4. Scale Calibration

Entering and Exiting Setup Mode

To enter setup mode from the front panel, press and hold RWEIGH and ZERO together. Release both buttons when the display reads CAL n.

To exit the calibration mode and save the changes, press REWEIGH or press TARE to scroll to the end of the menu. The Scale will then return to a normal weighing operation.

Two calibration procedures are offered.

- The Two Point calibration will calibrate the scale using only one weight that can be user defined. This calibration procedure is effective and can be used in the field with a test weight, or by using your own body weight.
- The Multiple Point calibration procedure requires four separate test weights. This procedure offers the greatest accuracy and is intended for factory or field calibration by a scale technician.

The Two Point calibration will calibrate the scale using only one weight that can be user defined. This calibration procedure is effective and can be used in the field with a test weight, or by using your own body weight.

Two Point Calibration Procedure

1. When the setup mode is entered the display reads CAL n.
2. Press the up arrow button to change the display to CAL Y.
3. Press TARE.
4. The display reads CAP, then the current Capacity value in lb or kg.
5. Press the up or down arrow to select a capacity from a table. Press the UNITS button to toggle between lb or kg Capacity units.
6. Press TARE to save current Capacity and advance to the zero point calibration.
7. The display reads CAL 0.
8. Remove all weight from the scale platform.
   NOTE: During calibration be sure vibration and air currents are not present.
9. Press TARE to perform a zero point calibration. The display will count down to zero. The counter will reset if too much motion (Er nn) is detected.
10. The scale will display 1000.0. Representing an 1000 lb span point calibration.
11. If necessary, press UNITS to calibrate in kilograms.
12. If desired, change the calibration weight by using the up or down arrow button to scroll the weight value.
    NOTE: The span weight value can be changed to any weight between 1% of capacity to full scale. For maximum accuracy, use 40% of capacity weight or more.
13. After the span weight has been entered, place the calibration weight on the platform.

14. Press TARE to accept the span weight value. The display will count down to zero and return to the weigh mode.

Multiple Point Calibration Procedure

1. When the setup mode is entered the display reads CAL n.
2. Press the up arrow button to change the display to CAL Y.
3. Press TARE.
4. The display reads CAP, then the current Capacity value in lb or kg.
5. Press the up or down arrow to select a capacity from a table, example 1000 lb (4500 kg). Press the UNITS button to toggle between lb or kg Capacity units.
6. Press TARE to save current Capacity and advance to the zero point calibration.
7. The display reads CAL 0.
8. Remove all weight from the scale platform.
   NOTE: During calibration be sure vibration and air currents are not present.
9. Press TARE to perform a zero point calibration. The display will count down to zero. The counter will reset if too much motion (Er nn) is detected.
10. The scale will display 1000.0. Representing a 1000 LB span point calibration.
11. Press Zero button, to enter multipoint calibration
12. The scale will display 200 LB (100 kg)
13. Place 200 LB (100 kg) onto the scale.
14. Press TARE. The display will count down to zero.
15. The scale will display 400 LB (200 kg)
16. Place 400 LB (200kg) onto the scale.
17. Press TARE. The display will count down to zero.
18. The scale will display 600 LB (300 kg)
19. Place 600 LB (300kg) onto the scale.
20. Press TARE. The display will count down to zero.
21. The scale will display 800 LB (400 kg)
22. Place 800 LB (400 kg) onto the scale.
23. Press TARE.
24. The display will count down to zero, display donE, SAvEd and return to the weigh mode.

Calibration Troubleshooting

If 9rUL or 9roL appears on the display, the calibration zero is out of range. Check connections between the indicator and base. Press TARE to perform the zero calibration again. If this error persists, consult the raw counts table.

If ErSP appears on the display, the span calibration is out of range. Place the proper weight on the platform and press TARE to perform the span calibration again. If this error persists, consult the raw counts table.

If ErnG appears on the display, the span calibration has detected a negative range. If this error persists, consult the raw counts table.

The following table shows the acceptable Raw Counts for no load and full load. Raw Counts can be viewed through the last setup parameter. Refer to Section 5, Parameter Setup, for more information regarding parameter viewing.

If the scale's raw counts are not within the ranges specified in the following table, contact Doran's Technical Assistance department at tech@doranscales.com.

Calibration Requirements in Raw Counts		
	Minimum	Maximum
Zero Calibration Point	-13100	98,300
Required Calibration Span (100% of Capacity Scale Cal Point – Zero Cal Point)	6,000	80,000
Required Calibration Span (20% of Capacity Cal Point – Zero Cal Point)	1,200	60,000

Section 5. Parameter Setup

The indicator has many adjustable parameters which control the scale's operation. The parameter settings shown in bold are the default settings.

Entering and Exiting Setup Mode

To enter setup mode from the front panel, press and hold REWEIGH and ZERO for 5 seconds. Release both buttons when the display reads CAL n.

To exit the setup mode and save changes, press REWEIGH or TARE to scroll to the end of parameter menu. *Note: If no buttons are pressed within 30 seconds, the scale will automatically exit the setup mode.*

Setup Mode Navigation

1. Press TARE to scroll forward to the next parameter.
2. Press ▲ or ▼ buttons to change the current parameter setting.
3. Press Reweigh to save any changes and exit setup mode.

Calibration Mode Entry

CAL	**Enter Calibration Mode** (60 second timer)
n	Do not enter calibration
y	Enter Calibration (see Scale Calibration section)

CAP	**Capacity** (60 second timer) Use the UNITS button to toggle between lb or kg capacities.
45(lb) 20(kg)	45 x 0.02 lb or 20 x 0.01 kg
50(lb) 25(kg)	50 x 0.02 lb or 25 x 0.01 kg
100(lb) 45(kg)	100 x 0.05 lb or 45 x 0.02 kg
500(lb) 230(kg)	500 x 0.2 lb or 230 x 0.1 kg
550(lb) 250(kg)	550 x 0.2 lb or 250 x 0.1 kg
600(lb) 270(kg)	600 x 0.2 lb or 270 x 0.1 kg
800(lb) 360(kg)	800 x 0.2 lb or 360 x 0.1 kg
1000(lb) 450(kg)	**1000 x 0.5 lb or 450 x 0.2 kg (default)**

CAL	Zero Calibration Point
0	*NOTE: This parameter is only visible when in the calibration mode. Press UNITS button to toggle between lb and kg units*

800.00	Span Calibration Point
1-800.0**(lb)** 1-360.0(kg)	Span calibration weight setting: *NOTE: This parameter is only visible after a zero calibration is performed.*

Reset All Parameters to Default Settings

rSt	Default parameters
n	No. Parameters are not defaulted.
y	Yes. Set all parameters to the factory default values when TARE is pressed. Calibration data is preserved.

Automatic Shutoff Timer

Ao	**Automatic shutoff timer. The timer controls the period of time the scale stays on after non-use.**
10	10 seconds
30	**30 Seconds (Default)**
60	1 minute
120	2 minutes
300	5 minutes
600	10 minutes
900	15 minutes
oF	Automatic shutoff timer disabled.

Average Aperture

AA	Determines the amount of motion allowed to hold a stable weight. A slower setting will result in more accurate weights but will require a longer time to achieve a stable weight. A faster setting will achieve a stable weight faster but may be less accurate.
4	Fastest Setting
8	Default Setting
16	Slowest Setting

Data Output

d.o.	**Controls when information is transmitted from the scale though the RS232 serial port and or USB port.**
t.d	EMR is transmitted when a request command is received through the RS-232 or USB port.
A.S	Transmits an EMR string after the STABLE HOLD or AVERAGE HOLD weight is displayed.
A.b	**Transmits an EMR string after the Height has been entered (default)**
C.P	Continuously transmits an EMR string 3.75 times a second.

EMR Format

For.	**Format Protocol of transmitted and received data from the serial port**
IW	IQvitals format. (9600,7,ODD,2)
WW	Welch Allyn Spot format. (2400,7,EVEN,1)
F0	Doran data format. F0 (9600,8,NO,1)
F1	**Doran data format. F1 (9600,8,NO,1)**
Fd	Doran data format. Fd (2400,8,NO,1)
FH	Doran data format. FH (2400,8,NO,2)

Configure Output

Conf	**Configure Serial Output (For future use)**
	Not detected (default)

r	Detected

LB Units Enable / Disable

	lb units Enable/Disable
on	**lb weighing units active (default)**
oF	lb weighing units disabled

KG Units Enable / Disable

	kg units Enable/Disable
on	**kg weighing units active (default)**
oF	kg weighing units disabled

Inches Units Enable / Disable

	Inches Height units Enable/Disable
0.1	0.1” increment for BMI entry
0.5	**0.5” increment for BMI entry (default)**
1.0	1.0” increment for BMI entry
oF	inches height units disabled

Centimeters Units Enable / Disable

	Centimeters Height units Enable/Disable
0.1	0.1 cm increment for BMI entry
0.5	0.5 cm increment for BMI entry
1.0	**1.0 cm increment for BMI entry (default)**
oF	cm height units disabled

Button Press Beep

bb	**Enables/Disables indicator beep when buttons are pressed**
on	Beep enabled
oF	**Beep disabled (default)**

Stable or Average Hold Weight Beep

bH	**Enables/Disables beep when a stable or average hold weight is achieved**
oF	Beep disabled.
on	**Beep enabled. (default)**

Battery Voltage Level

dC	**Displays current battery voltage (DC)**
	Battery Bar Indications: Empty Battery Symbol 5.1 – 5.9 V One Bar 6.0 – 6.9 V Two Bars 7.0 – 7.9 V Three Bars 8.0 – 9.0 V No Battery Indication 9.1 V and above

Raw Counts

xxxxx	**Raw counts from A/D converter**
	View these numbers if calibration is unsuccessful. Refer to Section 4 for interpretation of these numbers. Press TARE or Reweigh to exit setup mode.

Section 6. Data Communications

RS-232 Communications Port

The indicator is equipped with an RS-232 communications port. The RS-232 connection is located on the back of the indicator behind the top access cover. An optional RS-232 cable is available. Insert the phone style connector into the receptacle on the indicator housing and connect the 9-pin connector to your computer or printer.
Note: This option may reduce battery life.

Basic understanding of RS-232 data communications is needed when setting up the indicator to communicate with a printer or PC. When setting up an RS-232 communications system, there are two concerns which affect the configuration of that system. These are:

- Baud Rate
- Data Bits and Parity

The baud rate determines how fast the data is sent from the scale. The sending and receiving units must be set to the same baud settings. Refer to the **For.** parameter for details.

The indicator's data bits, parity and stop bits are set when configuring the **For.** parameter. The receiving units must match the scale setting for proper communication.

USB Communications Port

The indicator is equipped with a USB communications port. The USB connection is located on the back of the indicator behind the top access cover. An optional USB cable is available. Follow the instructions included with the option to install all necessary drivers.

Once the USB drivers are installed on your PC, insert the USB connector into the receptacle on the indicator and connect the other end of the cable to your computer.

Doran F0 protocol (F0) (9600, 8N1)		
Command (RXD) Computer to Scale	**Scale Output Responds (TXD)** Scale to Computer	**Description**
Z or z		Zero the scale (if in motion, scale will wait until stable, then zero)
<cr> or W	<stx><weight><sp> <uu><sp><cr><lf>	<stx> (☻) = ASCII 02h, Start of Text <weight> = 6 character field with decimal point <sp> ( ) = ASCII 20h, Space <uu> = 2 character field “lb” or “kg” <cr> (♪) = ASCII 0dh, Carriage Return <lf> (◙) = ASCII 0ah, Linefeed
U		Scale scrolls through available weight units
H	<height><sp><hh><sp>GR <sp><cr><lf>	Current Height value in inches or centimeters <height> = 6 character field with decimal point <sp> ( ) = ASCII 20h, Space <hh> = 2 characters Height Unit “in” or “cm” <cr> (♪) = ASCII 0dh, Carriage Return <lf> (◙) = ASCII 0ah, Linefeed
R or r		Scale performs a Reweigh operation

Doran F1 protocol (F1) (9600, 8N1)		
Command (RXD) Computer to Scale	**Scale Output Responds (TXD)** Scale to Computer	**Description**
Z or z		Zero the scale (if in motion, scale will wait until stable, then zero)
<cr> or W	<stx><pol><weight>#<uu>#GR S#<height>#<hh>#<bmi>#BMI <cr><lf>	<stx> (☻) = ASCII 02h, Start of Text <pol> = 1 character “-“ =negative, “ “=ASCII 20h <weight> = 6 character field with decimal point <uu> = 2 character field “lb” or “kg” <height> = 5 character field with decimal point <hh> = 2 characters Height Unit “in” or “cm” <bmi> = BMI value 4 character field with decimal point <cr> (♪) = ASCII 0dh, Carriage Return <lf> (◙) = ASCII 0ah, Linefeed
U		Scale scrolls through available weight units.
R or r		Scale performs a Reweigh operation (same as pressing the Reweigh button)

Doran Fd protocol (Fd) (2400, 8N1)		
Command (RXD) Computer to Scale	**Scale Output Responds (TXD)** Scale to Computer	**Description**
Z or z		Zero the scale (if in motion, scale will wait until stable, then zero)
<cr> or W	--:--,--/--/--,<bmi>,<height>, <gross><uu><sp>G <cr><lf>	<bmi> = BMI value 4 character field with decimal point <height> = 6 character field with decimal point and cm (metric) OR 7 character field with decimal point and ‘ after foot reading and “ after inch reading (SAE) <gross> = gross weight 6 character field with decimal point <uu> = 2 character field “lb” or “kg” <sp> ( ) = ASCII 20h, Space <cr> (♪) = ASCII 0dh, Carriage Return <lf> (◙) = ASCII 0ah, Linefeed
U		Scale scrolls through available weight units.
R or r		Scale performs a Reweigh operation (same as pressing the Reweigh button)

Doran FH protocol (FH) (Continuously transmits at 3.75 per second – 2400 8N2)		
Command (RXD) Computer to Scale	**Scale Output Responds (TXD)** Scale to Computer	**Description**
Z or z		Zero the scale (if in motion, scale will wait until stable, then zero)
<cr> or W	<stx><status><0xD7><0xE4> <weight><cr>	<stx> (☻) = ASCII 02h, Start of Text <status>0x80 = positive lb weight, 0x82 = positive kg weight <weight> = 6 character field with decimal point <cr> (♪) = ASCII 0dh, Carriage Return Current Display Weight. Active, Stable Hold, or Average Hold.
U		Scale scrolls through available weight units.
R or r		Scale performs a Reweigh operation (same as pressing the Reweigh button)

Welch Allyn Spot protocol (UU) (2400, 7E1)		
Command (RXD) Computer to Scale	**Scale Output Responds (TXD)** Scale to Computer	**Description**
DR<cr><lf>	<mot><sp><sp> <weight><uu><cr><lf>	<mot> “SD”=stable, “S_” = motion <sp> ( ) = ASCII 20h, Space <weight> = 6 character field with decimal point <uu> = 2 character field “lb” or “kg” <cr> (♪) = ASCII 0dh, Carriage Return <lf> (◙) = ASCII 0ah, Linefeed

IQ Vitals protocol (IU) Fairbanks TeleWeigh (9600, 7O2)		
Command (RXD) Computer to Scale	**Scale Output Responds (TXD)** Scale to Computer	**Description**
Z or z		Zero the scale (if in motion, scale will wait until stable, then zero)
<cr> or W	<weight><sp><uu><sp> <mot><sp><sp><cr><lf> <eot>	<weight> = 6 character field with decimal point <sp> ( ) = ASCII 20h, Space <uu> = 2 character field “lb” or “kg” <mot> = 2 character field “GR” = stable, “gr” = motion <cr> (♪) = ASCII 0dh, Carriage Return <lf> (◙) = ASCII 0ah, Linefeed <eot> (♦) = ASCII 04h, End of Transmit
U		Scale scrolls through available weight units.
H	<height><sp><hh><sp>GR<sp> <sp><cr><lf>	Current height value in inches “in”.
R or r		Scale performs a Reweigh operation

Section 7. Specifications

Scale Platform Dimensions Two Ramps Extended Dimensions: Folded Up Width	40.08" W x 36.14" D x 2.5" H 87.68" W x 36.14" D x 46.61" H 40.08" W
Wheels	Permanently sealed and lubricated Wheel Material EVA
Power	AC Adapter (UL, ULc and CE approved) One year battery life with 10 second Automatic Shutoff Timer setting
Displayed Units	lb, kg
Capacity	1000 x 0.1 lb 454 x 0.05 kg
Construction	Steel, Aluminum and Heavy Duty Composite Plastic
Options	RS-232 Communications USB Communications WIFI Communications International AC Adapter

Section 8. Troubleshooting

General Problem Resolution

Problem	What to Do or Check
Weight reading will not repeat or scale does not return to zero when weight is removed.	Person or object other than that being weighed is touching the scale. Verify that there is nothing caught in or interfering with the platform.
Scale overloads before scale capacity is reached.	Verify scale calibration is correct. If problem persists, recalibrate the scale.
Scale will not come to zero when the Zero button is pressed.	Make sure that the scale is stabilizing (Motion annunciator is off). After pressing the Zero button, the scale should zero as soon as it becomes stable.
Weight readings are not correct.	Verify the scale calibration with an accurate test weight. If the readings are not correct, recalibrate. Be sure the platform is on a flat surface and all four feet are touching the floor.
Scale drifts off zero.	Check for air currents and/or vibration around the scale.
Scale shuts itself off or will not turn on.	Press the ZERO button to turn on the indicator. Check that new batteries are installed properly in the battery tray. If using an AC adapter, confirm that it is firmly plugged into a functioning wall outlet. Verify the connector at the rear of the indicator is properly installed.

Doran Scales, Inc.
883 Enterprise Court
St. Charles, IL 60174

www.doranscales.com

tech@doranscales.com